INTERNATIONAL
TECHNOLOGY
SERVICES

ITS GmbH

D-63612 BAD ORB, SPESSARTSTRASSE 8

AFTER MARKET SPARE PARTS MECHANICAL COMPONENTS
GASKETS from -200° C to +950° C
OIL and GAS, POWER STATION, CHEMICAL INDUSTRY

Tel. 0049-60 52-92 76 66
Fax 0049-60 52-92 76 67
Mail: sales@itsgmbh.eu

- **Fertigung, Vertrieb und Logistik**
  Manufacturing, Marketing and Distribution
- **Kompetenz aus einer Hand**
  Competence from one source
- **schnell, zuverlässig, qualitätsbewußt**
  fast, reliable, quality-consciously

sales@itsgmbh.eu
www.tjeckel.com

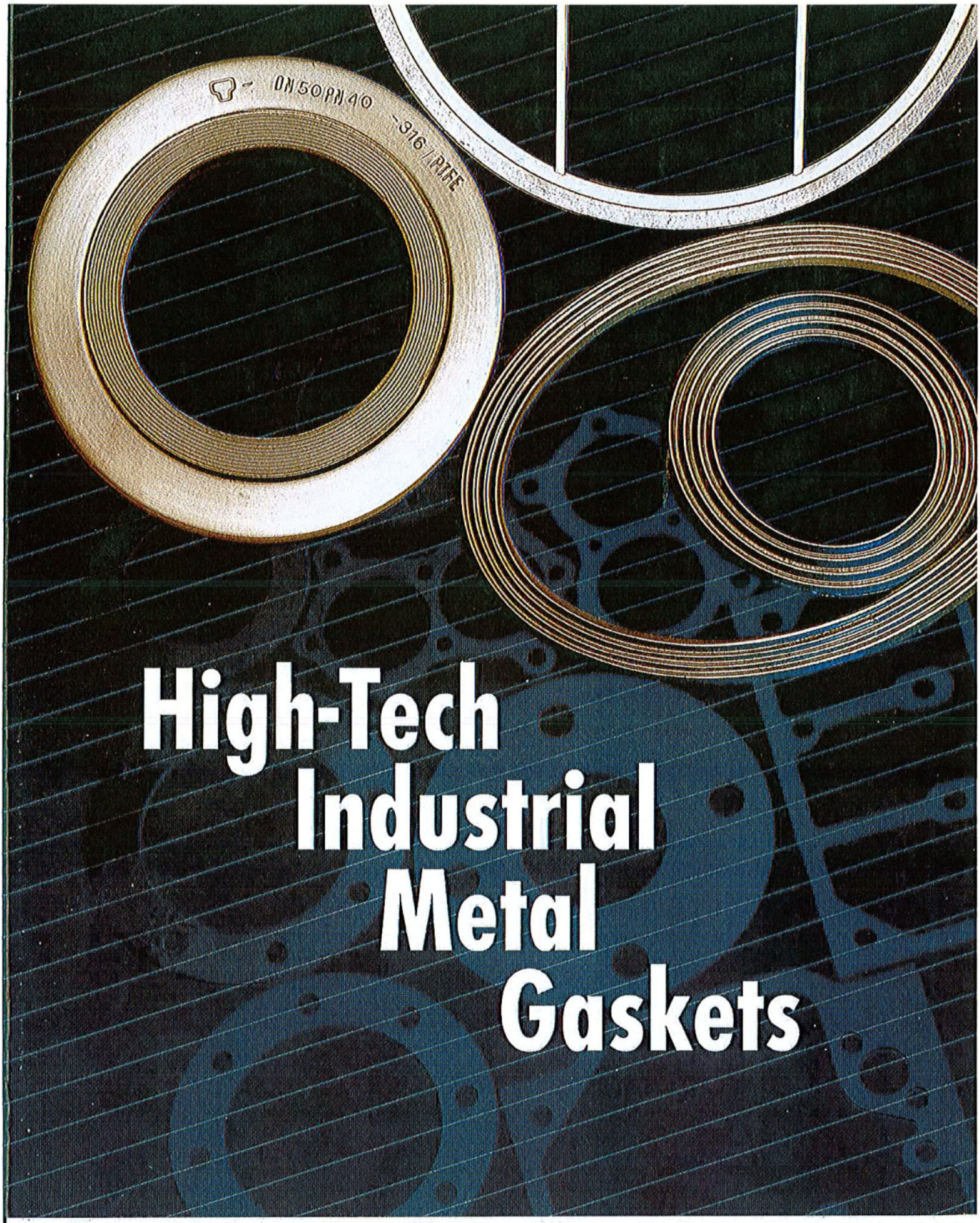

High-Tech Industrial Metal Gaskets

Fast · reliable · quality-concious
Overnight-Service 48 / 72 hrs.

GERMAN QUALITY

Since 1972

GASKETS APPLICATIONS AND USE

TYP	SECTION	APPLICATION	MAX DIMENSIONS (mm)		MAX.OPERATING PRESSURE (bar)	MAX.OPERATING TEMPERATURE(°C)	PG. NR.
			Diameter	Thickness			
MS 10		Valves bonets, stoppers for boilers	2200	2,5 - 7,2	400	550	2
MS 12		for high pressures, turbolences	2200	3,2 - 7,2	400	550	2
MS 14		for high pressures	2200	3,2 - 7,2	400	550	2
MS 16		for high pressures, turbolences	2200	3,2 - 7,2	400	550	2
MS 10 T		Gasket with sealing zone of PTFE	2200	3,2 -4,5	400	250	2
C		flange mail-femaile	200	1,5 - 5	100	550	8
MP10		Heat exchangers, steam and fluid seal	4000	2 ÷10	100	550	8
MP10A		Heat exchangers, steam and fluid seal	4000	3 ÷5	100	550	8
MP12		big flanges, not ideal flat	4000	2 ÷10	100	550	8
MP14		Heat exchangers, steam and fluid seal	4000	2 ÷10	100	550	8
MP16		gas and vapor seals	4000	2 ÷5	100	550	8
MP18		gas and vapor seals	4000	2 ÷5	100	550	8
MP19		valve covers and vacuum seals	4000	2 ÷4	100	550	8
MP22		steam (vapor) and fluid seal	2000	2 ÷5	100	550	8
M7A		power plants, manhole, heat exchangers	3000	2,5 ÷ 6	400	550	13
M7B		power plants, manhole, heat exchangers	3000	2,5 ÷ 7	400	550	13
M7C		power plants, manhole, heat exchangers	3000	2,5 ÷ 8	400	550	13
M7D		power plants, manhole, heat exchangers	3000	2,5 ÷ 9	400	550	13
M10		power plants, manhole, heat exchangers	3000	0,2 ÷ 3	400	550	13
M10A		power plants, manhole, heat exchangers	3000	2 ÷ 6	400	550	13
M14		air and gas compressor	1000	30	160	500	15
M15		high temperature and pressure	1000	11,18÷44,45	700	1000	15
M16		high temperature and pressure	1000	9,65÷41,4	700	1000	15
RX		high temperature and pressure	600	19,05÷25,4	700	1000	15
BX		high temperature and pressure	850	9,30÷39,84	1500	1000	15
M17		check valves, high temperature	1000	8÷50	320	600	15
MW12		Low pressure applications, space limitation	2000	1,2÷1,5	50	550	17
MW12A		Low pressure applications, higher temperatures, gas ducts	2000	3 ÷5	50	550	17
MW12AE		Low pressure applications, higher temperatures, gas ducts	2000	4 ÷5	50	550	17
MW13A		Low pressure applications, higher temperatures, gas ducts	2000	5 ÷5	50	550	17
MW22A		Flanges with large diameter, process industry	4000	8 ÷12	50	550	17
MW23A		Flanges with large diameter, process industry	4000	8 ÷12	50	550	17
MW12C		Flanges with large diameter, process industry	2000	5 ÷8	50	550	17
BA10			1500	1,5 ÷ 3	100	250	21
MP1		Good resistance to erosion	1500	1,5 ÷ 3	150	550	23
MP2		Good resistance to erosion	1500	1,5 ÷ 3	250	550	23
TF 02÷TF040		High chemical stability, good resistance in the atmosphere, aggresive chemicals	800	2 ÷ 10	50	250	24

Temperature and pressure represent maximum values and should not be used simultaneously. They are given only as guidance, since they depend not only on the type of gasket material but also on the assembly conditions. Very important factors are nature of service medium, type of flange, surface stress and others. Given values are recommended for typical flange gaskets constructions. Max.parameters can be changed by using special materials.

1. SPIRAL WOUND GASKETS

PROPERTIES AND APPLICATION

Spiral wound gaskets are special semi-metallic gaskets of great resilience, therefore they are very suitable for applications featuring heavy operating conditions. Spiral wound gaskets are manufactured by spirally winding a V-shaped metal strip and a strip of non-metallic filler material. The metal strip holds the filler, providing the gasket with mechanical resistance and resilience. Spiral wound gaskets can be reinforced by an outer centering ring and/or inner retaining ring. The outer centering ring controls the compression and holds the gasket centrally within the bolt circle. The inner retaining ring increases the axial rigidity and resilience of the gasket. Spiral wound gaskets should always be in contact with the flange and should not protrude into the pipe or project from the flange. Spiral wound gaskets can be used for sealing flange joints, manhole and handhold covers, tube covers, boilers, heat exchangers, pressure vessels, pumps, compressors and valves; in industries such as petrochemical, pharmaceutical, shipbuilding, and food processing, in power industries and nuclear power stations. They are ideal for steam, oil, liquids, gases, acids, alkalines, various organic mediums and solvents.

MS 10

MS 12

MS 14

MS 16

MS 10 T

ADVANTAGES:

- Sealing under heavy operating conditions
- Strong stress compensation, stable and reliable sealing performance even under frequent pressure fluctuation condition
- Solid construction provides stability and seallability even when the sealing surfaces are slightly corroded or bent
- Easy installation

SHAPE AND CONSTRUCTION

Spiral wound gaskets are produced in several styles and combination of materials to fit the most stringent application. Spiral wound gaskets are usually of circular shape, however we can produce them in other shapes such as: oval, rectangular, with round corners, etc. Our standard production program comprises a range of spiral wound gaskets with inner diameters of 10 to 2200 mm and a nominal thickness of 3.2, 4.5 and 6.5mm. Spiral wound gaskets of non-standard dimensions and shapes, and larger diameters are available on request.

Gasket standard styles:

- Gaskets without guide and inner ring (Type MS 10)
- Gaskets without guide and inner ring (Type MS 10T)*
- Gaskets with inner ring (Type MS 12)
- Gaskets with guide (outer) ring (Type MS 14)
- Gaskets with guide and with inner ring (Type MS 16)

* With PTFE sealing zone

Metallic strip

The standard thickness of the metallic strip is 0,2 mm.

MATERIALS FOR METALLIC STRIP	
ASTM	DIN Material No.
AISI 304	1.4301
AISI 316	1.4401
AISI 321	1.4541
AISI 316 Ti	1.4571
Monel (NiCu30Fe)	2.4360

Filler

Filler is normally used for thicknesses from 0,5 mm to 0,6 mm.

- Flexible graphite 98%
- Flexible graphite 99,85%
- PTFE
- Ceramic

Centering ring

The centering ring does not come into direct contact with contained fluid. It is normally made of carbon steel and electro plated or painted to avoid corrosion. Other materials are available on request.

Inner ring

Inner ring is used to avoid excessive compression due to high seating stress in high-pressure service and it is also used to reduce turbulence in the flange area. It is normally made of the same material as the gasket metallic strip.

DIMENSIONS

Manufacturing sizes

This limitations are general and can vary according to the special customer

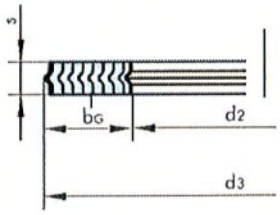

LIMITATIONS FOR MANUFACTURING DIMENSIONS			
Thickness s [mm]	Max diameter d_3[mm]	Maximum width - b_G[mm]	
		Graphite	PTFE
2,5	300	16	13
3,2	700	22	19
4,5	1150	30	24
6,5	2500	35	24

Thickness

The standard manufacturing thicknesses for spiral wound gaskets are: 3,2mm; 4,5mm; 6,5mm (measured across metallic strip not including the filler, which protrudes slightly beyond the metal).

Manufacturing tolerances

The tolerance of the gasket diameters (d1, d2, d3, d4, s, s1) are stipulated by ASME B 16.20 and EN 1514-2 standards. The gaskets designed for non-standard flanges meet the recommendations by the ASME B 16.20.

Dimensions

The dimensions of the standard SWG meet the ASME, BS and EN (DIN) standards.

1. SPIRAL WOUND GASKETS

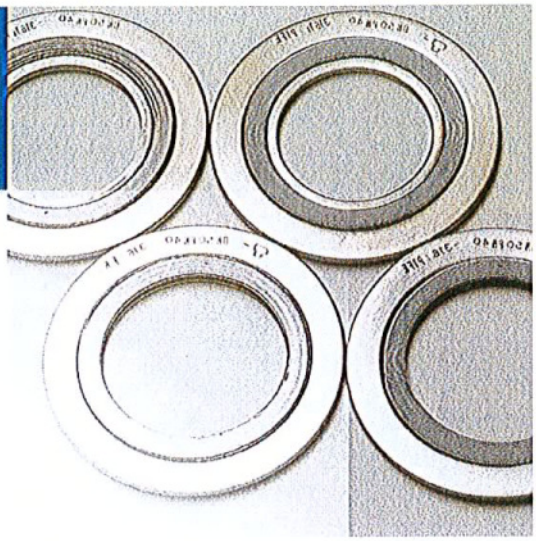

STANDARDS FOR SWG USED WITH FLANGES	
SWG Standard	Flange Standard
DIN Standard	DIN 2632 - 2638
EN 1514-2	PrEn 1092-1, flanges
ASME B 16.20 (API 601)	ANSI B 16.5
ASME B 16.20 (API 601)	ASME B 16.47 (API 605)
ASME B 16.20 (API 601)	MSS SP 44
ASME B 16.20	ANSI B 16.5
ASME B 16.20	BS 1560
ASME B 16.20	ASME B 16.47
EN 1514-2 (DIN 2691)	DIN 2512
EN 1514-2 (DIN 2692)	DIN 2513
ANSI B16.5	ANSI B16.21

ASME B 16.20 (API 601) for ANSI B16.5 flanges

DN	d1					d2					d3		d4						
In	150-300	400-600	900	1500	2500	150-300	400-600	900	1500	2500	150-600	900-2500	150	300	400	600	900	1500	2500
1/2	14,2	14,2	14,2	14,2	14,2	19,1	19,1	19,1	19,1	19,1	31,8	31,8	47,8	54,1	54,1	54,1	63,5	63,5	69,9
3/4	20,6	20,6	20,6	20,6	20,6	25,4	25,4	25,4	25,4	25,4	39,6	39,6	57,2	66,8	66,8	66,8	69,9	69,9	76,2
1	26,9	26,9	26,9	26,9	26,9	31,8	31,8	31,8	31,8	31,8	47,8	47,8	66,8	73,2	73,2	73,2	79,5	79,5	85,9
1 1/4	38,1	38,1	38,1	33,3	33,3	47,8	47,8	39,6	39,6	39,6	60,5	60,5	76,2	82,6	82,6	82,6	88,9	88,9	104,9
1 1/2	44,5	44,5	44,5	41,4	41,4	54,1	54,1	47,8	47,8	47,8	69,9	69,9	85,9	95,3	95,3	95,3	98,6	98,6	117,6
2	55,6	55,6	55,6	52,3	52,3	69,9	69,9	58,7	58,7	58,7	85,9	85,9	104,9	111,3	111,3	111,3	143,0	143,0	146,1
2 1/2	66,5	66,5	66,5	63,5	63,5	82,6	82,6	69,9	69,9	69,9	98,6	98,6	124,0	130,3	130,3	130,3	165,1	165,1	168,4
3	81,0	81,0	81,0	81,0	81,0	101,6	101,6	95,3	92,2	92,2	120,7	120,7	136,7	149,4	149,4	149,4	168,4	174,8	196,9
4	106,4	106,4	106,4	106,4	106,4	127,0	120,7	120,7	117,6	117,6	149,4	149,4	174,8	181,1	177,8	193,8	206,5	209,6	235,0
5	131,8	131,8	131,8	131,8	131,8	155,7	147,6	147,6	143,0	143,0	177,8	177,8	196,9	215,9	212,9	241,3	247,7	254,0	279,4
6	157,2	157,2	157,2	157,2	157,2	182,6	174,8	174,8	171,5	171,5	209,6	209,6	222,3	251,0	247,7	266,7	289,1	282,7	317,5
8	215,9	209,6	209,6	206,2	200,2	233,4	225,6	222,3	215,9	215,9	263,7	257,3	279,4	308,1	304,8	320,8	358,9	352,6	387,4
10	268,2	260,4	260,4	257,8	247,7	287,3	274,6	276,4	266,7	270,0	317,5	311,2	339,9	362,0	358,9	400,1	435,1	435,1	476,3
12	317,5	317,5	314,5	314,5	292,1	339,9	327,2	323,9	323,9	317,5	374,7	368,3	409,7	422,4	419,1	457,2	498,6	520,7	549,4
14	349,3	349,3	342,9	339,9		371,6	362,0	358,6	362,0		406,4	400,1	450,9	485,9	482,6	492,3	520,7	577,9	
16	400,1	400,1	393,7	387,4		422,4	412,8	412,8	406,7		463,6	457,2	514,4	539,8	536,7	565,2	574,8	641,4	
18	449,3	449,3	444,5	438,2		474,7	469,9	463,6	463,6		527,1	520,7	549,4	596,9	593,9	612,9	638,3	704,9	
20	500,1	500,1	495,3	489,0		525,5	520,7	520,7	514,4		577,9	571,5	606,6	654,1	647,7	682,8	698,5	755,7	
24	603,3	603,3	603,3	577,9		628,7	628,7	628,7	616,0		685,8	679,5	717,6	774,7	768,4	790,7	838,2	901,7	

ASME B16.47 Series B for API 605 flanges

DN	d1					d2					d3					d4				
In	150	300	400	600	900	150	300	400	600	900	150	300	400	600	900	150	300	400	600	900
26	654,1	654,1	654,1	644,7	673,1	673,1	673,1	666,8	663,7	692,2	698,5	711,2	698,5	714,5	749,3	725,4	771,7	746,3	765,3	838,2
28	704,9	701,9	701,8	692,2	723,9	723,9	723,9	714,5	704,9	743,0	749,3	762,0	749,3	755,7	800,1	776,2	825,5	800,1	819,2	901,7
30	755,7	755,7	752,6	752,6	787,4	774,7	774,7	765,3	778,0	806,5	800,1	812,8	806,5	828,8	857,3	827,0	886,0	857,3	879,6	958,3
32	806,5	806,5	800,1	793,8	838,2	825,5	825,5	812,8	831,9	863,6	850,9	863,6	858,5	882,7	914,4	881,1	939,8	911,4	933,5	1016,0
34	857,3	857,3	850,9	850,9	895,4	876,3	876,3	868,9	889,0	920,8	908,1	914,4	911,4	939,8	971,6	935,0	993,9	962,2	997,0	1073,2
36	908,1	908,1	898,7	901,7	927,1	927,1	927,1	917,7	939,8	946,2	958,9	962,2	965,2	990,6	997,0	987,6	1047,8	1022,4	1047,8	1124,0
38	958,9	971,6	952,5	952,5	1009,7	974,6	1009,7	971,6	990,6	1035,1	1009,7	1047,8	1022,4	1041,4	1085,9	1044,7	1098,6	1073,2	1104,9	1200,2
40	1009,7	1003,3	1000,3	1009,7	1060,5	1022,4	1060,5	1025,7	1047,8	1098,6	1063,8	1098,6	1076,5	1098,6	1149,4	1095,5	1149,4	1127,3	1155,7	1251,0
42	1060,5	1054,1	1051,1	1066,8	1111,3	1079,5	1111,3	1076,5	1104,9	1149,4	1114,6	1149,4	1127,3	1155,7	1200,2	1146,3	1200,2	1178,1	1219,2	1301,8
44	1111,3	1124,0	1104,9	1111,3	1155,7	1124,0	1162,1	1130,3	1162,1	1206,5	1165,4	1200,2	1181,1	1212,9	1257,3	1197,1	1251,0	1231,9	1270,0	1368,6
46	1162,1	1178,1	1168,4	1162,1	1219,2	1181,1	1216,2	1193,8	1212,9	1270,0	1224,0	1254,3	1244,6	1263,7	1320,8	1255,7	1317,8	1289,1	1327,2	1435,1
48	1212,9	1231,9	1206,5	1219,2	1270,0	1231,9	1263,7	1244,6	1270,0	1320,8	1270,0	1311,4	1295,4	1320,8	1371,6	1306,6	1368,6	1346,2	1390,7	1485,9
50	1263,7	1267,0	1257,3	1270,0		1282,7	1317,8	1295,4	1320,8		1325,6	1355,9	1346,2	1371,6		1357,4	1419,4	1403,4	1447,8	
52	1314,5	1317,8	1308,1	1320,8		1335,5	1368,6	1346,2	1371,6		1376,4	1406,7	1397,0	1422,4		1408,2	1470,2	1454,2	1498,6	
54	1365,3	1365,3	1352,6	1378,0		1384,3	1403,4	1403,4	1428,8		1422,4	1454,2	1454,2	1479,6		1463,8	1530,4	1517,7	1555,8	
56	1422,4	1428,8	1403,4	1428,8		1444,8	1479,6	1454,2	1479,6		1477,8	1524,0	1505,0	1530,4		1514,6	1593,8	1568,6	1612,9	
58	1478,0	1484,4	1454,2	1473,2		1500,4	1535,2	1505,0	1538,7		1528,8	1573,3	1555,8	1587,5		1579,6	1655,8	1619,3	1663,7	
60	1535,2	1557,3	1517,7	1530,4		1557,3	1589,0	1568,6	1593,9		1586,0	1630,4	1619,3	1644,7		1630,4	1706,6	1682,8	1733,6	

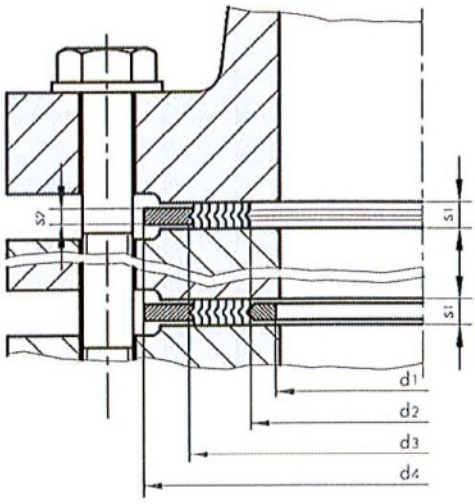

All dimensions are in mm

BS 1560 for ANSI B16.5 flanges

NPS	DN	d1		d2		d3	d4						
mm	in	150-400	600-2500	150-400	600-2500	150-2500	150	300	400	600	900	1500	2500
15	1/2	12,7	12,7	19,1	19,1	31,8	44,4	50,8	50,8	50,8	60,3	60,3	68,7
20	3/4	20,6	20,6	27	27	39,7	53,9	63,5	63,5	63,5	68,7	68,7	73
25	1	27	27	33,3	33,3	47,6	63,6	69,8	69,8	69,8	78,2	76,2	82,5
32	1 1/4	41,3	39,7	47,6	46	60,3	73	79,4	79,4	79,4	85,7	85,7	101,6
40	1 1/2	49,2	47,6	55,6	54	69,9	82,6	92,1	92,1	92,1	95,2	95,2	114,3
50	2	61,9	60,3	71,4	69,9	85,7	101,6	108	108	108	139,7	139,7	142,8
65	2 1/2	74,6	73	84,1	82,6	98,4	120,6	127	127	127	161,9	161,9	165,1
80	3	95,3	92,1	104,8	101,6	120,7	133,4	146,1	146,1	146,1	165,1	171,5	193,7
90	3 1/2	108	104,8	117,5	114,3	133,4	158,8	161,9	158,7	158,7			
100	4	117,5	114,3	130,2	127	149,2	171,5	177,8	174,6	190,5	203,2	208,4	231,7
125	5	144,5	141,3	157,2	154	177,8	193,7	212,7	209,5	238,1	244,5	250,8	276,2
150	6	171,5	168,3	184,2	181	209,6	219,1	247,7	244,5	263,5	285,8	279,4	314,3
200	8	222,3	219,1	235	231,8	263,5	276,2	304,8	301,6	317,5	355,6	349,3	384,1
250	10	276,2	269,9	288,9	282,6	317,5	336,6	358,8	355,6	396,9	431,8	431,8	473
300	12	330,2	323,8	342,9	336,5	374,6	406,4	419,1	415,9	454	495,3	517,5	546,1
350	14	361,9	355,6	374,6	368,3	406,4	447,7	482,6	479,4	488,9	517,5	574,7	
400	16	412,7	406,4	425,4	419,1	463,5	511,2	536,6	533,4	561,9	571,5	638,1	
450	18	466,7	460,4	479,4	473,1	527	546,1	593,7	590,5	609,6	635	701,7	
500	20	517,5	511,2	530,2	523,9	577,8	603,2	650,0	644,5	679,5	695,3	752,4	
650	22	574,4	568,4	587,4	581,1	635	657,2	701,7	698,5	730,3			
600	24	622,3	615,9	635	628,6	685,8	714,4	771,5	765,2	787,4	835	898,5	

ASME B 16.47 Series A for MSS SP 44 flanges

DN	d1					d2					d3					d4				
in	150	300	400	600	900	150	300	400	600	900	150	300	400	600	900	150	300	400	600	900
26	654,1	654,1	660,4	647,7	666,8	673,1	685,8	685,8	685,8	685,8	704,9	736,6	736,6	736,6	736,6	774,7	835,2	831,9	868,9	882,7
28	704,9	704,9	711,2	698,5	711,2	723,9	736,6	736,6	736,6	736,6	755,7	787,4	787,4	787,4	787,4	831,9	898,7	892,3	914,4	946,2
30	755,7	755,7	755,7	755,7	774,7	774,7	793,8	793,8	793,8	793,8	806,5	844,6	844,6	844,6	844,6	882,7	952,5	946,2	971,6	1009,7
32	806,5	806,5	812,8	812,8	812,8	825,5	850,9	850,9	850,9	850,9	860,6	901,7	901,7	901,7	901,7	939,8	1006,6	1003,3	1022,4	1073,2
34	857,3	857,3	863,6	863,6	863,6	876,3	901,7	901,7	901,7	901,7	911,4	952,5	952,5	952,5	952,5	990,6	1057,4	1054,1	1073,2	1136,7
36	908,1	908,1	917,7	917,7	920,8	927,1	955,8	955,8	955,8	958,9	968,5	1006,6	1006,6	1006,6	1009,7	1047,8	1117,6	1117,6	1130,3	1200,2
38	958,9	952,5	952,5	952,5	1009,7	977,9	977,9	971,6	990,6	1035,1	1019,3	1016,0	1022,4	1041,4	1085,9	1111,3	1054,1	1073,2	1104,9	1200,2
40	1009,7	1003,3	1000,3	1009,7	1060,5	1028,7	1022,4	1026,7	1047,8	1098,6	1070,1	1070,1	1076,5	1098,6	1149,4	1162,1	1114,6	1127,3	1155,7	1251,0
42	1050,5	1054,1	1051,1	1068,8	1111,3	1079,5	1073,2	1078,5	1104,9	1149,4	1124,0	1120,9	1127,3	1155,7	1200,2	1219,2	1165,4	1178,1	1219,2	1301,8
44	1111,3	1104,9	1104,9	1111,3	1155,7	1130,3	1130,3	1130,3	1162,1	1206,5	1178,1	1181,1	1181,1	1212,9	1257,3	1276,4	1219,2	1231,9	1270,0	1368,6
46	1162,1	1152,7	1168,4	1162,1	1219,2	1181,1	1178,1	1193,8	1212,9	1270,0	1228,9	1228,9	1244,6	1263,7	1320,8	1327,2	1273,3	1289,1	1327,2	1435,1
48	1212,9	1209,8	1206,5	1219,2	1270,0	1231,9	1235,2	1244,6	1270,0	1320,8	1279,7	1288,0	1295,4	1320,8	1371,6	1384,3	1324,1	1346,2	1390,7	1485,9
50	1263,7	1244,6	1257,3	1270,0		1282,7	1295,4	1295,4	1320,8		1333,5	1346,2	1346,2	1371,6		1435,1	1378,0	1403,4	1447,8	
52	1314,5	1320,8	1308,1	1320,8		1333,5	1346,2	1346,2	1371,6		1384,3	1397,0	1397,0	1422,4		1492,3	1428,8	1454,2	1498,6	
54	1358,9	1352,6	1352,6	1378,0		1384,3	1403,4	1403,4	1428,8		1435,1	1454,2	1454,2	1479,6		1549,4	1492,3	1517,7	1555,8	
56	1409,7	1403,4	1403,4	1428,8		1435,1	1454,2	1454,2	1479,6		1485,9	1505,0	1505,0	1530,4		1606,6	1543,1	1568,5	1612,9	
58	1460,5	1447,8	1454,2	1473,2		1485,9	1511,3	1505,0	1536,7		1536,7	1562,1	1555,8	1587,5		1663,7	1593,9	1619,3	1663,7	
60	1511,3	1524,0	1517,7	1530,4		1535,7	1562,1	1568,5	1593,9		1587,5	1612,9	1619,3	1644,7		1714,5	1644,7	1682,8	1733,6	

DIN 2632-2638 flanges

DN	d1	d2	d3		d4									
mm	PN 10-320	PN 10-320	PN 10-40	PN 64-320	PN 10	PN 16	PN 25	PN 40	PN 64	PN 100	PN 160	PN 250	PN 320	PN 400
10	18	24	36	36	46	46	46	46	56	56	56	67	67	67
15	22	28	40	40	51	51	51	51	61	61	61	72	72	78
20	27	33	47	47	61	61	61	61	72	72	72	77	77	
25	34	40	54	54	71	71	71	71	82	82	82	83	92	104
32	43	49	65	65	82	82	82	82	90	90	90	100		
40	48	54	70	70	92	92	92	92	103	103	103	109	119	135
50	57	66	84	84	107	107	107	107	113	119	119	124	134	150
65	73	82	102	104	127	127	127	127	137	143	143	153	170	192
80	86	95	115	119	142	142	142	142	148	154	154	170	190	207
100	108	120	140	144	162	162	168	168	174	180	180	202	229	256
125	134	146	168	172	192	192	194	194	210	217	217	242	274	301
150	162	174	196	200	217	217	224	224	247	257	257	284	311	348
175	183	195	221	227	247	247	254	265	277	287	284	316	358	402
200	213	225	251	257	272	272	284	290	309	324	324	358	398	442
250	267	279	307	315	327	328	340	352	364	391	368	442	488	
300	318	330	358	366	377	383	400	417	424	458	458	538		
350	363	375	405	413	437	443	457	474	486	512				
400	414	426	458	466	488	495	514	546	543	572				
450	460	478	526	551	558	567	574	578	534					
500	518	530	566	574	593	617	624	628	657	704				
600	618	630	666	674	695	734	731	747	764	813				
700	718	730	770	778	810	804	833	852	879					
800	818	830	874	882	917	911	942	974	988					
900	910	930	974	982	1017	1011	1042	1084	1108					
1000	1010	1030	1078	1086	1124	1128	1154	1194	1220					
1200	1210	1230	1280	1290	1341	1342	1364	1398	1452					
1400	1420	1450	1510		1548	1542	1578	1618						
1600	1630	1660	1720		1772	1764	1798	1830						
1800	1830	1860	1920		1972	1964	2000							
2000	2020	2050	2120		2182	2168	2230							
2200	2230	2260	2330		2384	2376								
2400	2430	2480	2530		2594									
2600	2630	2660	2730		2794									
2800	2830	2860	2930		3014									
3000	3030	3060	3130		3228									

1. SPIRAL WOUND GASKETS

SWG FOR TONGUE and GROOVE FLANGES - EN 1514-2 (DIN 2691) and ANSI B16.5 according to DIN 2512 AND ANSI B16.21

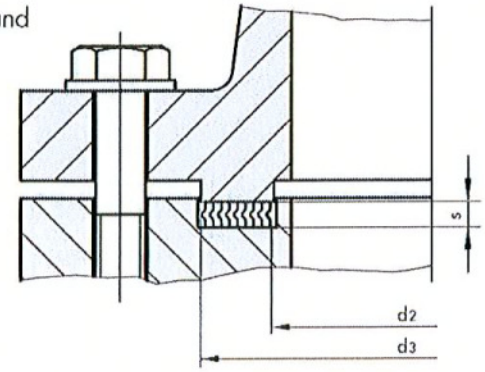

SWG FOR MALE and FEMALE FLANGES - EN 1514-2 (DIN 2692) and ANSI B16.5 according to DIN 2513 and ANSI B16.21

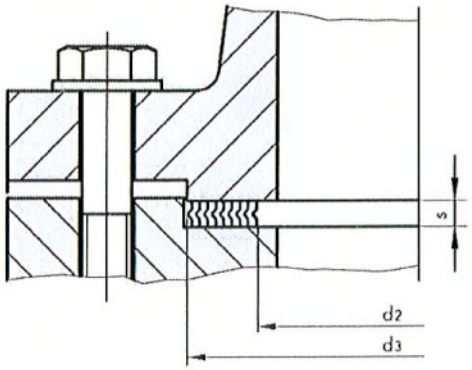

GASKET ORDERING EXAMPLE:

Spiral wound gasket MS 16,
API 601 for ANSI B16.5, 2"-150lbs,
Winding, inner ring: AISI 316,
Filler: Graphite 98%,
Centering ring: CS

NON-STANDARD SWG

All standard types can be delivered in non-standard dimensions according to customer request.

Gaskets for Boilers Handholes and Manholes:

Gaskets Type MS 10 can be manufactured in other shapes like oval and oblong (stadium). There is no specific standard for this type of gasket. When ordering it providing complete specifications is required: Internal dimensions (AxB), width (b) and thickness (s) or a drawing.

GASKET ORDERING EXAMPLE:

Spiral wound gasket MS 10,
A x B x b x s
Winding: AISI 316,
Filler: Graphite 98%

Oval shape

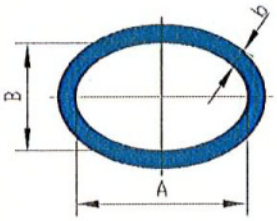

Dim.:AxBxbxs (mm)

Oblong (stadion) shape

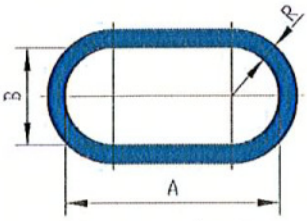

Dim.:AxBxbxs (mm)

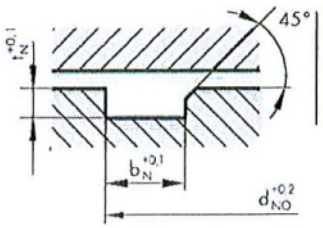

Gasket compression

Spiral-would gaskets shall be designed in such a way that a uniform bolt stress, based on the nominal root diameter will compress the gasket to a thickness(e).

STANDARD GASKET COMPRESSION			
s	3,5	4,5	6,5
e	$2,5^{\pm 0,1}$	$3,3^{\pm 0,1}$	$4,7^{\pm 0,1}$

Connections with non-load bearing gaskets

Since no standards exist as yet for the use of spiral-wound gaskets in no-load bearing connections, the application of guidelines from the adjacent table is recommended.

GASKETS AND GROOVES DIMENSIONS								
Spiral-wound gasket					Groove			
d_H	b_G	d_3	d_2	s	d_{NO}	b_N	d_{Ni}	t_N
< 300	5-9	$d_G + b_G$	$d_G - b_G$	3,5	$d_3 + 1$	$b_G/0,86$	$d_{NO} - 2b_N$	$2,5^{\pm 0,1}$
< 1000	9-17	$d_G + b_G$	$d_G - b_G$	3,5	$d_3 + 1,5$		$d_{NO} - 2b_N$	$2,5^{\pm 0,1}$
< 300	5-9	$d_G + b_G$	$d_G - b_G$	4,5	$d_3 + 1$		$d_{NO} - 2b_N$	$3,3^{\pm 0,1}$
< 1000	9-17	$d_G + b_G$	$d_G - b_G$	4,5	$d_3 + 1,5$		$d_{NO} - 2b_N$	$3,3^{\pm 0,1}$

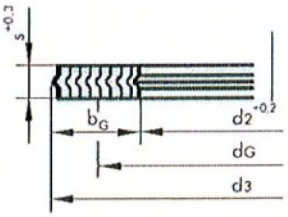

b_G- gasket width

b_N- groove width

Tolerance Table

Flange size		Projection and recess			Smooth contactface					
NPS	DN	d2	d3	s1	d1	d2	d3	d4	s1	s2
< 10"	< 300	± 0,5	± 0,5	+ 0,8 + 0,1	± 0,8	± 0,8	± 0,8	± 0,8	+ + 0,1	+ 0,25 -0,15
10" - 24"	300 - 700	± 0,8	± 0,8	+ 0,8 + 0,1	± 0,8	± 0,8	± 0,8	+ 0,8 -1,6	+ 0,8 + 0,1	+ 0,25 -0,15
26" - 50"	800 - 1200	± 1,2	± 1,2	+ 0,8 + 0,1	± 1,6	± 1,6	± 1,6	+ 0,8 -2,0	+ 0,8 + 0,1	+ 0,25 -0,15
> 50"	> 1200				± 2,4	± 2,4	± 2,4	+ 0,8 -3,0	+ 0,8 + 0,1	+ 0,25 -0,15

Gasket parameters

		DIN 2505		ASME	
Gasket Type	MATERIAL (Jacket)	k_1 [mm]	$k_0 x k_D$ [N/mm]	m	y [MPa]
MS 10, MS 12, MS 14, MS 16	Steel, Cr-Steel	1,3xbD	50xbD	1,3	50
	CrNi-Steel, Monel	1,4xbD	55xbD	1,4	55
	CrNi-Steel (Graphite/PTFE)	1,2xbD	40xbD	1,2	40

LOAD BEARING GASKETS

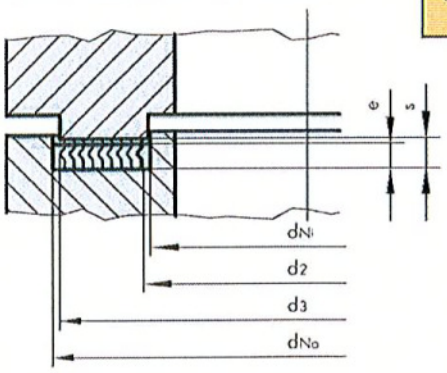

2. METAL - JACKETED GASKETS

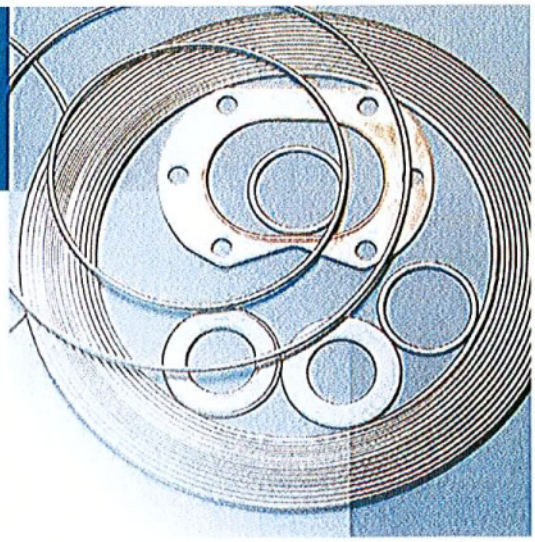

PROPERTIES AND APPLICATION

Metal - jacketed gaskets are particularly suitable for sealing flat surfaces of heat exchangers, gas pipes, cast iron flanges, autoclaves and similar.
By their sealing efficiently, provided by exerting strong pressure on circular rims of the flanges, metal - jacketed gaskets can stand up to 30% deviation from the initial thickness, which is very useful in case of irregular or faulty flange rims. The chemical compatibility of the metal and the medium being sealed should be considered.

ADVANTAGES:

Suitable for high assembly stress.
Highly resistant against blow-out.

SHAPE AND CONSTRUCTION

Metal-jacketed gaskets are produced in several types to meet the requirements of the most demanding applications. Inside a metallic jacket they feature a soft filler as shown in the figure.

Material	ASTM	DIN Material No.
Low Carbon Steel	Soft iron	1.1003
Stainless steel	AISI 304	1.4301
Stainless steel	AISI 316	1.4401
Stainless steel	AISI 321	1.4541
Stainless steel	AISI 316	1.4571
Monel (NiCu30Fe)	TIB172,alloy 400	2.4360
Copper	Copper	2.0090
Brass	Brass Ms 63	2.0321
Aluminium	Aluminium 99.5	3.0255

The metallic jacket is normally 0,4mm thick.
Other materials are available on customer request.

Filler

The standard filler material is Flexible Graphite.
Other fillers like ceramic, mineral or another can be also used.

SIZE

The metal jacketed gaskets come in sizes according to EN 1514-4, ANSI B16.21and ANSI B16.5 standards.

Maximum size:

Outside diameter: up to 4000 mm
Thickness: from 2 to 12 mm

MANUFACTURING TOLERANCES		
Gasket inside diameter (mm)	Diameter tolerance (mm.)	
	Inside diameter	Outside diameter
Up to 150	+0,8; -0,0	+0,0; -0,8
from 150 to 1500	+1,6; -0,0	+0,0; -1,6
1500 or greater	+2,4; -0,0	+0,0; -2,4

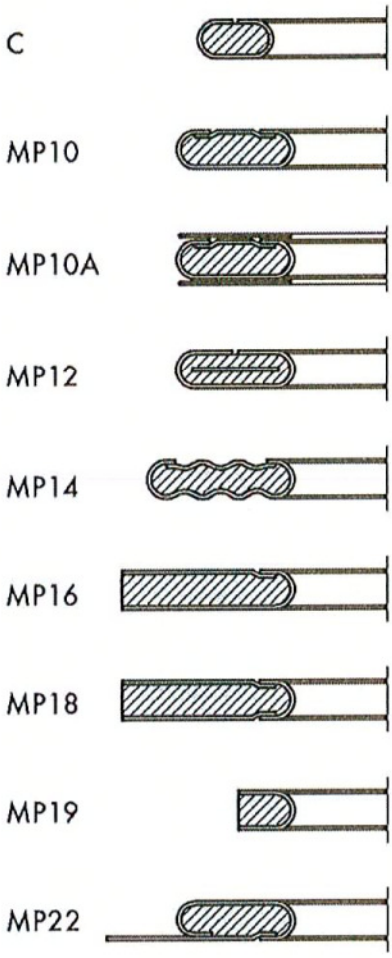

		DIN 2505		ASME	
Gasket Type	MATERIAL (Jacket)	k_1 [mm]	$k_0 x K_0$ [N/mm]	m	y [MPa]
C, MP10, MP12, MP16, MP18, MP19, MP22	Crome-nickel steel	2,0xbD	100xbD	2,0	100
	Nickel	1,8xbD	70xbD	1,8	70
	Soft Iron	1,8xbD	70xbD	1,8	70
	Cu	1,6xbD	60xbD	1,6	60
	Ms	1,6xbD	60xbD	1,6	60
	Aluminium	1,4xbD	50xbD	1,4	50

NON-STANDARD DIMENSION:
Metal jacketed gasket MP 10
OD = 836 mm, ID = 804 mm, s = 3,2 mm,
Material: Cu,
Filler: Ceramic

GASKET ORDERING EXAMPLE:

STANDARD DIMENSION:
Metal jacketed gasket MP 10,
ANSI B16.5, 8"- 600lbs,
Material: AISI 304,
Filler: Graphite

STANDARDS FOR METAL JACKETED GASKETS USED WITH FLANGES	
METAL JACKETED GASKETS Standard	Flange Standard
EN 1514-4	DIN flange and BS4504
ASME B 16.20 (API 601)	ANSI B 16.5
ASME B 16.20 (API 601)	ASME B 16.47 (API 605)

MP10

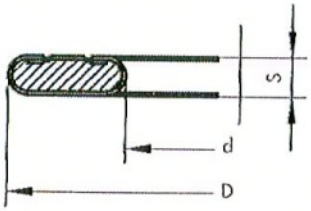

MP14

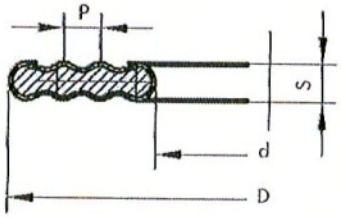

MP10 AND MP14 FOR ANSI B 16.5 FLANGES

DN	d	D						
In	mm	150 lb	300 lb	400 lb	600 lb	900 lb	1500 lb	2500 lb
1/2"	23,8	44,5	50,8	50,8	50,8	60,4	60,4	66,8
3/4"	31,8	54	63,5	63,5	63,5	66,7	66,7	73,1
1"	36,5	63,5	69,9	69,9	69,9	76,2	76,2	82,5
1 1/4"	48	73	79,4	79,4	79,4	85,8	85,8	101,6
1 1/2"	52,4	82,6	92,1	92,1	92,1	95,3	95,3	114,3
2"	73,2	101,6	108	108	108	139,7	139,7	143
2 1/2"	85,9	120,6	127	127	127	161,9	161,9	165,1
3"	107,8	133,4	146,1	146,1	146,1	165,1	171,5	193,8
4"	131,8	171,5	177,8	174,7	190,5	203,2	206,5	231,9
5"	152,4	193,8	212,8	209,5	238,2	244,6	250,9	276,3
6"	190,5	219,1	247,7	244,5	263,6	285,8	279,4	314,5
8"	238,3	276,3	304,8	301,7	317,5	355,6	349,3	384,3
10"	285,8	336,6	358,8	355,6	396,9	431,8	431,8	473,2
12"	342,9	406,4	419,1	415,9	454,1	495,3	517,6	546,1
14"	374,7	447,7	482,6	479,5	489	517,6	574,7	
16"	425,5	511,2	638,6	533,4	562	571,6	638,2	
18"	489	546,1	593,7	590,6	609,6	635	701,8	
20"	533,4	603,3	650,9	644,5	679,5	695,5	752,5	
24"	641,4	714,4	771,6	765,3	787,4	835,1	898,6	

MP10 IN MP14 FOR RF FLANGES ASME B16.47 SERIES A

DN	d	D				
In	mm	150 lb	300 lb	400 lb	600 lb	900 lb
26"	673,1	771,6	831,8	828,8	863,6	879,6
28"	723,9	828,8	895,3	889	911,3	943,1
30"	774,7	879,6	949,4	943,1	968,5	1006,6
32"	825,5	936,7	1003,3	1000,2	1019,3	1070,1
34"	876,3	987,6	1054,1	1051	1070,1	1133,6
36"	927,1	1044,7	1114,7	1114,5	1127,2	1197,1
38"	977,9	1108,2	1051	1070,1	1101,8	1197,1
40"	1028,7	1159	1111,2	1124	1152,6	1248
42"	1079,5	1266,1	1162	1174,7	1216,1	1298,7
44"	1130,3	1273,3	1216,1	1228,8	1267	1365,2
46"	1181,1	1324,1	1270	1286	1324,1	1432
48"	1231,9	1381,2	1320,8	1343,1	1387,6	1482,8
50"	1282,7	1432	1374,9	1400,3	1444,7	
52"	1333,5	1489,2	1426,7	1451,1	1495,5	
54"	1384,3	1546,3	1489,2	1514,61	1552,7	
56"	1431,1	1603,5	1540	565,4	1603,5	
58"	1485,9	1660,6	1590,8	1616,2	1660,6	
60"	1536,7	1711,4	1641,6	1679,7	1730,5	

TOLERANCES:

	do 24"	nad 24"
D	+ 1,58	+ 3,3
	- 0	- 0
d	+ 1,58	+ 3,3
	- 0	- 0
s	+ 0,8	+ 0,8
	- 0	- 0

3. GASKETS FOR HEAT EXCHANGERS

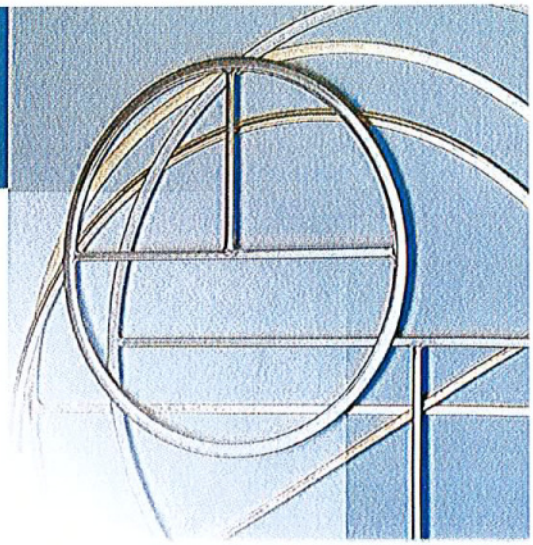

PROPERTIES AND APPLICATION

Heat Exchanger Gasket is a term that has been given to gasket used in heat exchangers. The structure of the gasket or its type varies according to the operating conditions of the exchangers. The heat exchanger gaskets come in a broad spectre of types including single or double jacketed, corrugated, plain metal, soft and many other. A large selection of different materials allows heat exchangers to operate at temperatures beyond the capabilities of most soft gasket materials.

ADVANTAGES

- Available in wide range of materials, since they are all custom made. There are few limitations regarding size and shape.
- Metal jacketed heat exchangers
- The Metal jacket provides mechanic strength to contain the filler and improves chemical resistance.
- Unique construction provides stability and ensures trouble-free handling and installation.

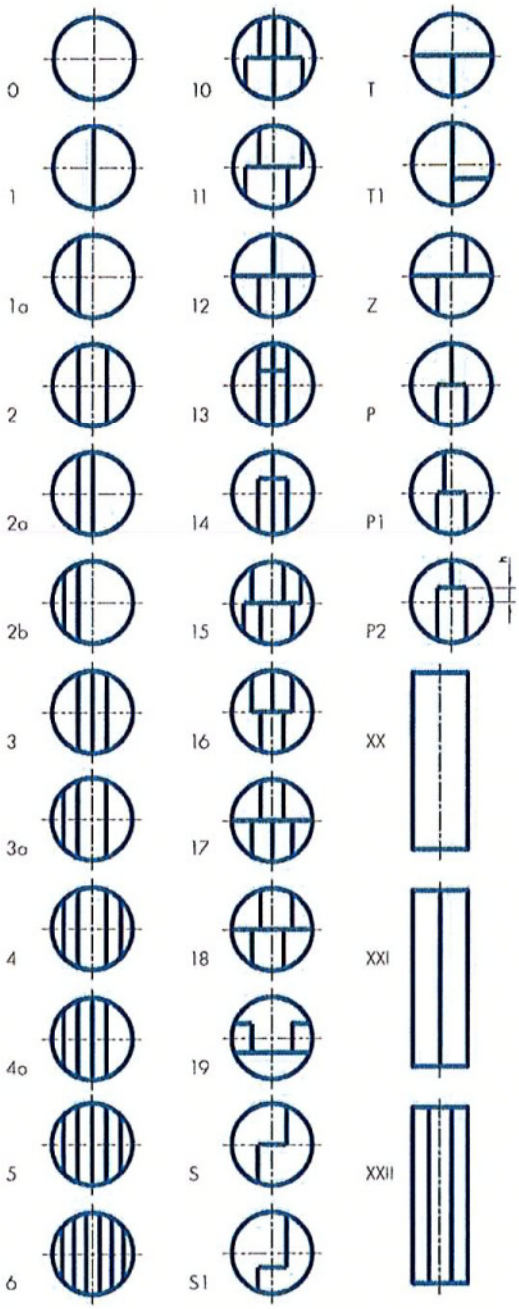

SHAPE AND CONSTRUCTION

These gaskets are used in shell and tube type heat exchangers. They can be manufactured in very different sizes, shapes, with or without bars. The primary seal is at the inner diameter of the gasket, the external gasket diameter acts as a secondary seal. The bars seal between the heat exchangers passages.

Heat exchanger gaskets are produced in several types to meet the most demanding applications. Gaskets for heat exchangers can be manufactured in metal or alloy with a thickness 0,4 mm featuring a soft core inside a metallic jacket.

Gaskets with integrated bars

Traditionally double-jacketed gaskets for heat exchangers are manufactured with integrated bars. There is a radius between the bars and an internal diameter of the gaskets.

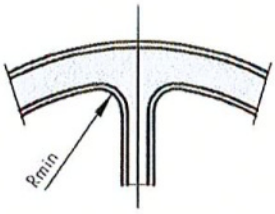

MP10 WITH INTEGRAL BAR

The values of the corresponding radius for the most commonly used metals and alloys are shown in the following table. If a radius is less than R min, the material can crack, reducing the sealing properties of the gaskets.

GASKET MATERIALS and R min

GASKET MATERIALS and Rmin	
Gasket material	**Rmin**
Copper	8 mm
Soft iron (CS)	8 mm
Brass, Monel	10 mm
Stainless steel	10 mm

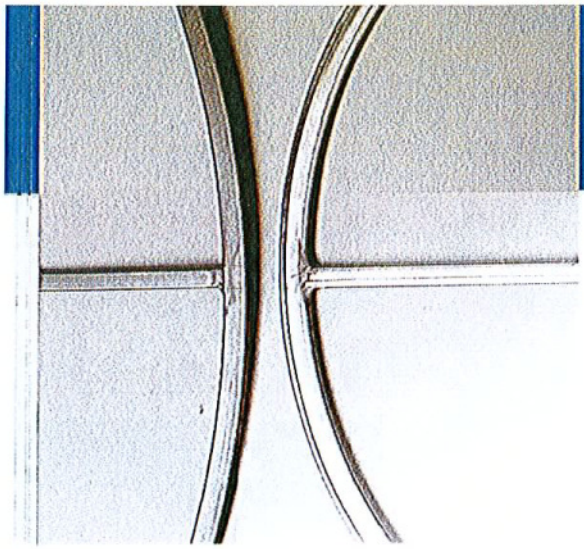

3.GASKETS FOR HEAT EXCHANGERS

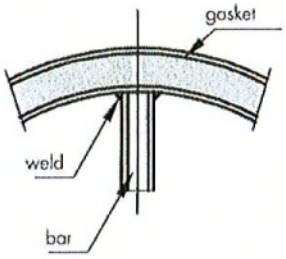

MP10 WITH WELDED BAR

Gaskets with welded bars

Gaskets with welded bars have eliminatedone of the greatest problems of conventional gaskets, which are cracks in the radius. Metal or alloys are commercially available in sheets or rolls of 1000 mm width. Gaskets with welded bars have been developed to overcome the above mentioned problems.

The primary and secondary seals are continuous all around the gasket. The gasket has an excellent sealability, reducing leaks to the environment. The bars which seal between the heat exchangers passages are plasma or TIG welded with spot welds at each end. These welds should be soft and small to avoid areas of increased resistance to sealing.

Materials For Heat Echanger Gaskets

The selection of the jacket material depended on operating conditions.
The standard filler is Flexible graphite.

Metallic jacket

MATERIALS FOR THE METALLIC JACKET		
Material	ASTM	DIN Material No.
Low Carbon Steel	Soft iron	1.1003
Stainless steel	AISI304	1.4301
Stainless steel	AISI316	1.4401
Stainless steel	AISI 321	1.4541
Stainless steel	AISI 316 Ti	1.4571
Monel (NiCu30Fe)	B172,alloy 400	2.4360
Copper	Copper	2.0090
Brass	Brass Ms 63	2.0321
Aluminium	Aluminium 99.5	3.0255
Titanium	B348 Gr.1	3.7025

Filler

Flexible graphite, ceramic, calandered sealing materials,...

SIZES

STANDARD DIMENSIONS	
gasket thickness:	3,2mm
gasket width:	10, 13 and 16mm
bar width:	8, 10 and 13mm

Gaskets with external diameter to 1000 mm are normally made with integrated bars. Gaskets with an external diameter greater than 1000 mm are normally made with welded bars. According to the heat exchangers shapes and sizes other dimensions can be manufactured on request.

GASKET ORDERING EXAMPLE

Gasket style (MP10, MP14),shape drawing

Dimensions: External diameter D, internal diameter d, gasket thickness s, bar width w, radius R and distance between bars.

Material for metal jacket, material for filler

3.GASKETS FOR HEAT EXCHANGERS

SPIRAL WOUND GASKETS FOR HEAT EXCHANGERS

The spiral wound gaskets of MS10, MS12, MS14, or MS16 type can be manufactured with one or more metal jacketed bars (profile MP10) in different shape shown in drawing. Metal-jacketed bars are welded and made of the same material as the spiral windings. The standard thicknesses are 3,2mm,4,5mmand 6,5mm.

MAX. DIMENSIONS	
Thickness s [mm]	Max. diameter d_3 [mm]
3,2	750
4,5	1400
6,5	2300
7,2	2300

GASKET ORDERING EXAMPLE

SWG style,
metal jacketed profile (MP 10),
material,
shape drawing

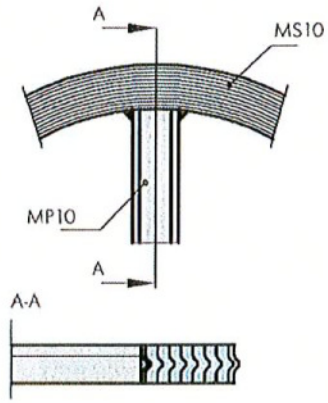

MS210

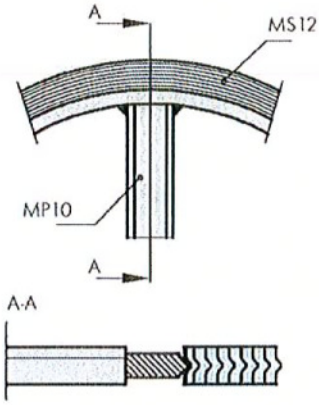

MS212

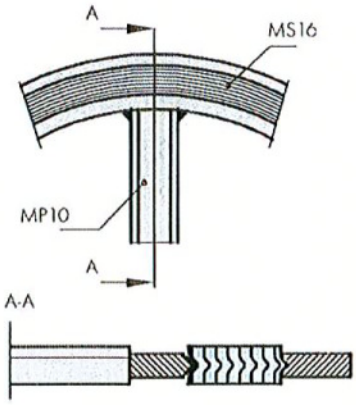

MS216

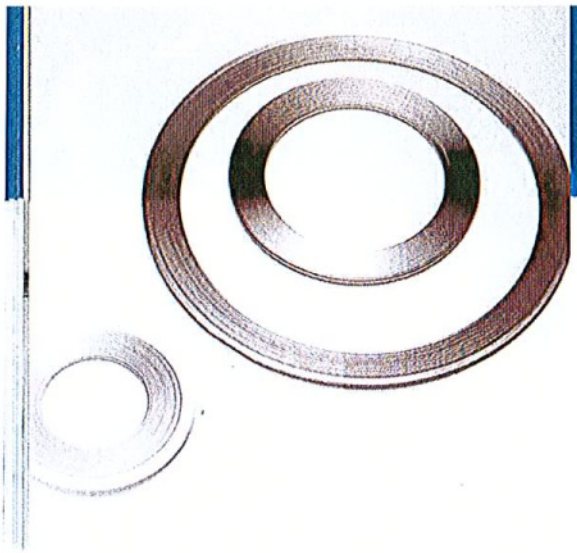

4. GROOVED GASKETS

PROPER TIES AND APPLICATION

The groved gasket is the preferred gasket when improved performance at low seating stresses is required. It features excellent anti-blow-out properties linked with the reliably of a solid metal-to-metal seal combined with a soft sealing face to provide a tighter joint. Metal gaskets with grooved faces have proven to be very effective for sealing flange connections, and are particularly suitable for applications where high temperatures, pressures and fluctuating conditions are encountered. Non-metal cover layers ensure that flanges are not damaged, even at extreme loads, and provide excellent sealing properties when supported by the grooved metallic gasket. The grooved gasket is an ideal replacement for problem applications associated with jacketed gaskets, for heat exchangers, vessels and reactors and various flanged connections.

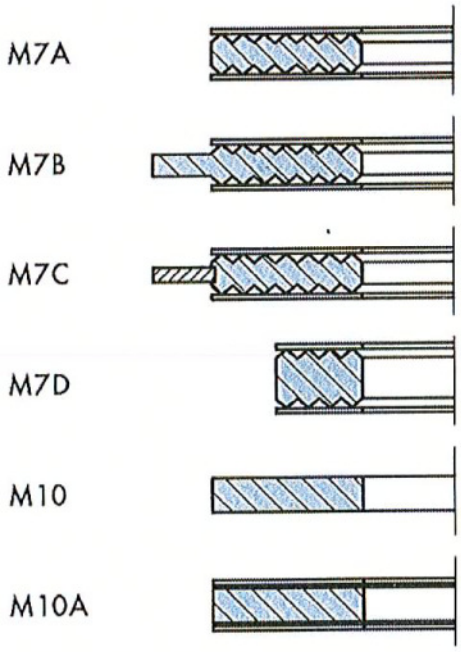

ADVANTAGES

- Capable of sealing pressures exceeding 250 bar
- Capable of withstanding temperatures up to 700°C
- Particularly effective in maintaining performance under condition of fluctuating temperatures and pressures
- Solid construction provides stability even for large diameters and ensures trouble-free handling and installation
- Gaskets can be fitted to existing assemblies without modification

SHAPE AND CONSTRUCTION

The grooved gaskets are produced in several types to fit the most demanding applications.

METALLIC MATERIALS		
Material	ASTM	DIN Material No.
Stainless steel	AISI 321	1.4541
Stainless steel	AISI 316 Ti	1.4571

SIZES

Upon request the grooved gaskets can be manufactured in various shapes and sizes.

4. GROOVED GASKETS

Grooved gaskets for ANSI B16.5 flanges

ANSI				150 lbs	300 lbs	400 lbs	600 lbs	900 lbs	1500 lbs	2500 lbs
In	DN	d1	d2	d3						
1/2	15	23,0	33,3	44,4	50,8	50,8	50,8	60,3	60,3	66,7
3/4	20	28,6	39,7	53,9	63,5	63,5	63,5	66,7	66,7	73,0
1	25	36,5	47,6	63,5	69,8	69,8	69,8	76,2	76,2	82,5
1 1/4	32	44,4	60,3	73,0	79,4	79,4	79,4	85,7	85,7	101,6
1 1/2	40	52,4	69,8	82,5	92,1	92,1	92,1	95,2	95,2	114,3
2	50	69,8	88,9	101,6	108,0	108,0	108,0	139,7	139,7	142,8
2 1/2	65	82,5	101,6	120,6	127,0	127,0	127,0	161,9	161,9	165,1
3	80	98,4	123,8	133,4	146,1	146,1	146,1	165,1	171,5	193,7
3 1/2	90	111,1	136,5	158,8	161,9	158,7	158,7			
4	100	123,8	154,0	171,5	177,8	174,6	190,5	203,2	206,4	231,7
5	125	150,8	182,6	193,7	212,7	209,5	238,1	244,5	250,8	276,2
6	150	177,8	212,7	219,1	247,7	244,5	263,5	285,8	279,4	314,3
8	200	228,6	266,7	276,2	304,8	301,6	317,5	355,6	349,3	384,1
10	250	282,6	320,7	336,5	358,8	355,6	369,9	431,8	431,8	473,0
12	300	339,7	377,8	406,4	419,1	415,9	454,0	495,3	517,5	546,1
14	350	371,5	409,6	447,7	482,6	479,4	488,9	517,5	574,7	
16	400	422,3	466,7	511,2	536,6	533,4	561,9	571,5	638,1	
18	450	479,4	530,2	546,1	593,7	590,5	609,6	635,0	701,7	
20	500	530,2	581,0	603,2	650,9	644,5	679,5	695,3	762,4	
22	550	581,0	631,8	657,2	701,7	698,5	730,3			
24	600	631,8	682,6	714,4	771,5	765,2	787,4	835,0	898,5	

DIN 2697

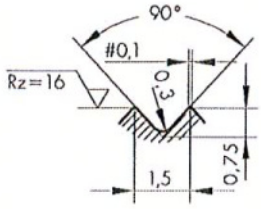

Grooved gaskets for DIN flanges

DIN					2632	2633	2634	2635	2636	2637	2638	2628
		PN										
DN	d1	10-40	63-160	250-400	10	16	25	40	63	100	160	250
		d2			d3							
10	22	36	36	36	46	46	46	46	56	56	56	67
15	26	42	42	42	51	51	51	51	61	61	61	72
20	31	47	47	47	61	61	61	61				
25	36	52	52	52	71	71	71	71	82	82	82	83
32	46	62	62	66	82	82	82	82				
40	53	69	69	73	92	92	92	92	103	103	103	109
50	65	81	81	87	107	107	107	107	113	119	119	124
65	81	100	100	103	127	127	127	127	137	143	143	153
80	95	115	115	121	142	142	142	142	148	154	154	170
100	118	138	138	146	162	162	168	168	174	180	180	202
125	142	162	162	178	192	192	194	194	210	217	217	242
150	170	190	190	212	217	217	224	224	247	257	257	284
175	195	215	215	245	247	247	254	265	277	287	284	316
200	220	240	248	280	272	272	284	290	309	324	324	358
250	270	290	300	340	327	328	340	352	364	391	388	442
300	320	340	356	400	377	383	400	417	424	458	458	
350	375	395	415		437	443	457	474	486	512		
400	426	450	474		489	495	514	546	543	572		
450	480	506			539	555		571				
500	530	560	588		594	617	624	628	657	704		
600	630	664	700		695	734	731	747	764	813		
700	730	770	812		810	804	833	852	879	950		
800	830	876	886		917	911	942	974	988			
900	930	982	994		1017	1011	1042	1064	1108			
1000	1040	1098	1110		1124	1128	1154	1194	1220			
1200	1250	1320	1334		1341	1342	1364	1398	1452			

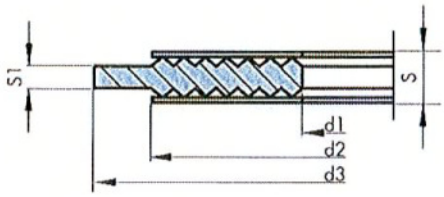

GASKET ORDERING EXAMPLE

Grooved gasket M7A,
EN 1514-4 (DIN 2697) DN 80-PN 40,
1.4541/Graphite
All dimensions are in mm

5. RING JOINT GASKETS

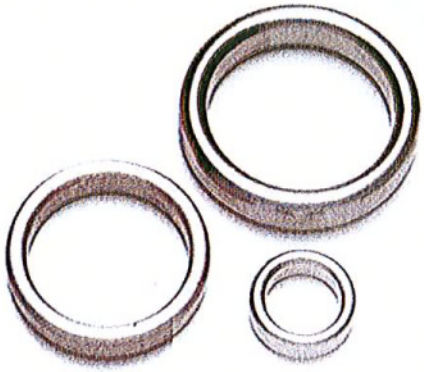

PROPERTIES AND APPLICATION

The metallic ring joint gaskets are manufactured according to the API 6A and ASME B16.20 standards for application at elevated temperatures and pressures. The small sealing area with high contact pressure results in great reliability. The contact surfaces of the gaskets and flange should be carefully processed. Some types of ring-joints are pressure activated, that is, the greater the pressure the better the sealability.

ADVANTAGES

The metal ring joint gaskets have been designed to withstand exceptionally high assembly loads over a small area, thus producing high seating stresses.

SHAPE AND CONSTRUCTION

The ring joint gaskets are produced in several shapes and sizes to meet the most demanding applications.

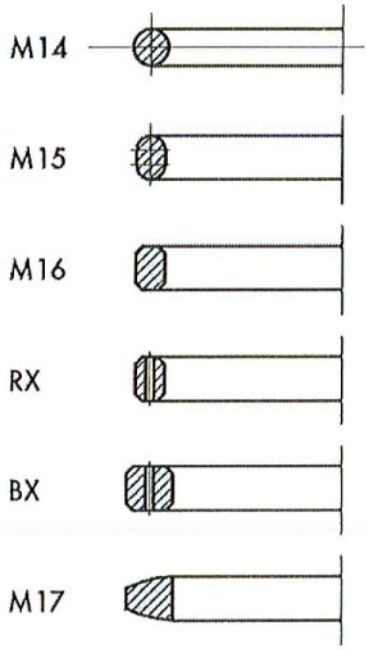

STANDARD MATERIALS

Standard materials recommended by the ANSI B16.20				
ASTM	DIN Material.No.	Maximum HB	Maximum HV	Material code
Soft Iron	1.1003	90	56	D
Low CS	1.0038	120	68	S
4-6 Cr ½ Mo	1.7362	130	72	F5
AISI 410	1.4000	170	86	S 410
AISI 304	1.4301	160	83	S 304
AISI 316	1.4401	160	83	S 316
AISI 347	1.4550	160	83	S 347

DIMENSIONS

STANDARDS FOR RING JOINTS GASKETS USED WITH FLANGES		
Ring Joints Gaskets style	Ring Joints Gaskets Standard	Flange Standard
R	ASME B 16.20 API 6A	ANSI B 16.5 ANSI B 16.47 series A
RX	ASME B 16.20 API 6A	API 6B
BX	API 6A	API 6BX

GASKET ORDERING EXAMPLE

RING-JOINT GASKET API 6A, R30-oval,
material AISI 321

STYLE BX

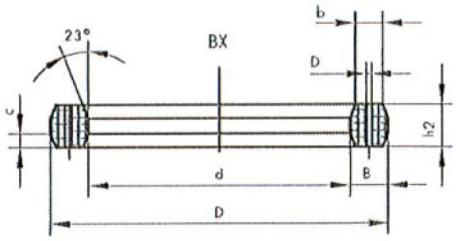

STYLE RX

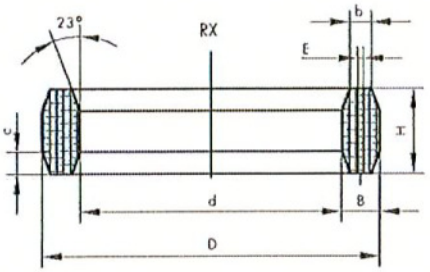

STYLE R

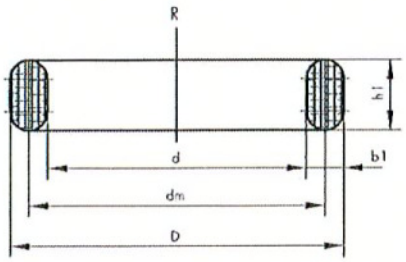

OVAL SECTION

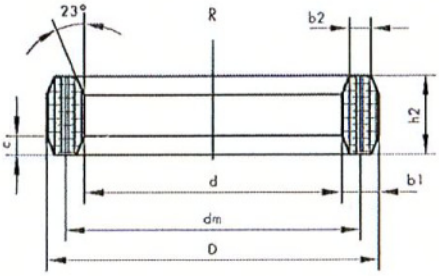

OCTAGONAL SECTION

5. RING JOINT GASKETS

NOMINAL PIPE SIZE/ NOMINAL PRESSURE										DIMENSIONS									WEIGHT	
ASME/ANSI B16.5					ASME B16-47A		AR 68			Tolerances	+/- 0,38	+/- 0,38	+/- 0,17	+/- 0,39	+/- 0,39	+/- 0,20	+/- 0,20		OVAL	OCTAG.
150	300-600	900	1500	2500	300-600	900	2000	3000	5000	R	D (mm)	d (mm)	dm (mm)	h1 (mm)	h2 (mm)	b1 (mm)	b2 (mm)		kg	kg
	1/2									R31	40,49	27,79	34,14	11,18	9,65	6,35	4,32		0,05	0,05
		1/2	1/2							R32	47,65	31,75	39,70	14,22	12,70	7,95	5,23		0,10	0,10
	3/4			1/2						R33	50,83	34,93	42,88	14,22	12,70	7,95	5,23		0,10	0,10
		3/4	3/4							R34	52,40	38,50	44,45	14,22	12,70	7,95	5,23		0,11	0,11
1										R35	55,58	39,68	47,63	14,22	12,70	7,95	5,23		0,12	0,12
	1	1	1	3/4			1	1	1	R36	58,75	42,85	50,80	14,22	12,70	7,95	5,23		0,12	0,11
1 1/4										R37	65,10	49,20	57,15	14,22	12,70	7,95	5,23		0,14	0,13
	1 1/4	1 1/4	1 1/4	1			1 1/4	1 1/4	1 1/4	R38	62,28	52,38	60,33	14,82	12,70	7,95	5,23		0,15	0,14
1 1/2										R39	73,05	57,15	65,10	14,82	12,70	7,95	5,23		0,16	0,15
	1 1/2	1 1/2	1 1/2				1 1/2	1 1/2	1 1/2	R40	76,23	60,33	68,28	14,82	12,70	7,95	5,23		0,17	0,15
				1 1/4						R41	83,37	61,11	72,24	17,53	16,00	11,13	7,75		0,30	0,29
2										R42	90,50	74,60	82,55	14,82	12,70	7,95	5,23		0,20	0,19
	2			1 1/2			2			R43	93,68	71,42	82,55	17,53	16,00	11,13	7,75		0,34	0,33
		2	2					2	2	R44	106,38	84,12	95,25	17,53	16,00	11,13	7,75		0,39	0,38
2 1/2										R45	109,55	93,65	101,60	14,22	12,70	7,95	5,23		0,25	0,23
	2 1/2			2			2 1/2			R46	112,73	90,47	101,60	17,53	16,00	11,13	7,75		0,42	0,41
		2 1/2	2 1/2					2 1/2	2 1/2	R47	119,08	96,82	107,95	19,05	16,00	11,13	7,75		0,45	0,43
				2 1/2						R48	123,87	98,43	111,13	14,22	17,53	12,70	8,66		0,57	0,55
3										R49	122,25	107,95	114,30	17,53	12,70	7,95	5,23		0,28	0,26
	3									R50	128,61	108,35	117,48	17,53	16,00	11,13	7,75		0,48	0,47
	3	3					3	3		R51	134,96	112,70	123,85	17,53	16,00	11,13	7,75		0,51	0,50
				3						R52	139,70	114,30	127,00	19,05	17,53	12,70	8,66		0,65	0,63
3 1/2										R53	139,73	123,83	131,78	14,22	12,70	7,95	5,23		0,32	0,30
	3 1/2									R54	142,91	120,65	131,78	17,53	16,00	11,13	7,75		0,54	0,52
			3						3	R55	147,66	125,40	136,53	17,53	16,00	11,13	7,75		0,56	0,55
4										R56	157,18	141,28	149,23	14,22	12,70	7,95	5,23		0,37	0,34
	4	4					4	4	3 1/2	R57	160,36	138,10	149,23	17,53	16,00	11,13	7,75		0,62	0,60
				4						R58	173,06	141,30	157,18	22,35	20,57	15,88	10,49		1,16	1,14
			4						4	R59	173,06	150,80	161,93	17,53	16,00	11,13	7,75		0,67	0,65
5										R60	179,40	163,50	171,45	14,22	12,70	7,95	5,23		0,42	0,39
	5	5					5	5		R61	192,11	169,85	180,98	17,53	16,00	11,13	7,75		0,75	0,73
				5						R62	209,55	171,45	190,50	24,40	23,68	19,05	12,32		1,91	1,88
6										R63	201,63	185,73	193,68	14,22	12,70	7,95	5,23		0,48	0,44
			5						5	R64	204,81	182,55	193,68	17,53	16,00	11,13	7,75		0,80	0,78
	6	6					6	6		R65	222,28	200,02	211,15	17,53	16,00	11,13	7,75		0,87	0,85
			6						6	R66	223,85	198,45	211,15	19,05	17,53	12,70	8,66		1,08	1,05
				6						R67	247,65	209,55	228,60	25,40	23,88	19,05	12,32		2,29	2,26
8										R68	255,60	239,70	247,65	14,22	12,70	7,95	5,23		0,61	0,56
	8	8					8	8		R69	281,01	258,75	269,88	17,53	16,00	11,13	7,75		1,11	1,09
			8						6	R70	265,76	254,00	269,88	22,35	20,57	15,88	10,49		1,99	1,95
				8						R71	301,63	257,17	279,40	28,70	26,92	22,23	14,81		3,65	3,69
10										R72	312,75	296,85	304,80	14,22	12,70	7,95	5,23		0,75	0,69
	10	10					10	10		R73	334,98	312,72	323,85	17,53	16,00	11,13	7,75		1,34	1,30
			10						10	R74	339,73	307,97	323,85	22,35	20,57	15,88	10,49		2,39	2,35
				10						R75	371,48	314,32	342,90	36,58	35,05	28,58	19,81		7,35	7,68
12										R76	388,95	373,05	381,00	14,22	12,70	7,95	5,23		0,93	0,87
	12	12			12	12	12	12		R77	392,13	369,87	381,00	17,53	16,00	11,13	7,75		1,57	1,53
			12							R78	403,23	358,77	381,00	28,70	26,92	22,23	14,81		4,98	5,03
14										R79	404,83	388,93	396,88	14,22	12,70	7,95	5,23		0,98	0,90
				12						R80	438,15	374,65	406,40	39,62	38,10	31,75	22,33		10,47	11,09
	14				14		14	14		R81	430,23	407,97	419,10	17,53	16,00	11,13	7,75		1,73	1,69
		14				14				R82	434,68	403,22	419,10	22,35	20,57	15,88	10,49		3,09	3,04
			14							R83	444,50	393,70	419,10	33,27	31,75	25,40	17,30		7,33	7,54
16										R84	461,98	446,06	454,03	14,22	12,70	7,95	5,21		1,12	1,03
	16				16		16			R85	481,03	458,77	469,90	17,53	16,00	11,13	7,75		1,94	1,89
		16				16		16		R86	485,78	454,02	469,90	22,35	20,57	15,88	10,49		3,47	3,40
			16							R87	498,48	441,32	469,90	36,58	35,05	28,58	19,81		10,07	10,53
18										R88	525,48	509,58	517,53	14,22	12,70	7,95	5,23		1,28	1,18
	18				18		18			R89	544,53	522,27	533,40	17,53	16,00	11,13	7,75		2,20	2,15
		18				18		18		R90	552,45	514,35	533,40	25,40	23,88	19,05	12,32		5,35	5,27
			18							R91	561,98	504,82	533,40	36,58	35,05	28,58	19,81		11,43	11,95
20										R92	566,75	550,85	558,80	14,22	12,70	7,95	5,23		1,38	1,27
	20				20		20			R93	596,90	571,50	584,20	19,05	17,53	12,70	8,66		2,99	2,92
		20				20		20		R94	603,25	565,15	584,20	25,40	23,88	19,05	12,32		5,85	5,77
			20							R95	615,95	552,45	584,20	39,62	38,10	31,75	22,33		15,05	15,94
24										R96	681,05	665,15	673,10	14,22	12,70	7,95	5,23		1,66	1,53
	24				24					R97	708,03	676,27	692,15	22,35	20,57	15,88	10,49		5,11	5,01
		24				24				R98	717,55	666,75	692,15	33,27	31,75	25,40	17,30		12,10	12,46
			24							R99	727,08	657,22	692,15	44,45	41,40	34,93	24,82		22,58	22,06
				22						R80	623,90	608,00	615,95		12,70	7,95	5,23			1,40
					22					R81	649,30	620,70	635,00		19,05	14,30	9,58			3,86
									1	R82	68,28	46,02	57,15		16,00	11,13	7,75			0,23
									1 1/2	R84	74,63	52,37	63,50		16,00	11,13	7,75			0,25
									2	R85	92,08	66,68	79,38		17,53	12,70	8,66			0,40
									2 1/2	R86	106,38	74,62	90,50		20,57	15,88	10,49			0,65
									3	R87	115,91	84,15	100,03		20,57	15,88	10,49			0,72
									4	R88	142,88	104,78	123,83		23,88	19,05	12,32			1,22
									3 1/2	R89	133,35	95,25	114,30		23,88	19,05	12,32			1,13
									5	R90	177,81	133,35	155,58		26,92	22,23	14,81			2,05
									10	R91	292,10	228,60	260,35		38,10	31,75	22,33			7,10
										R92	239,73	217,47	228,60		17,53	16,00	11,13	7,75		0,94	0,92
					26					R93	768,35	730,25	749,30			23,88	19,05	12,32			7,40
					28					R94	819,15	781,05	800,10			23,88	19,05	12,32			7,90
					30					R95	876,30	838,20	857,25			23,88	19,05	12,32			8,47
					32					R96	936,63	892,17	914,40			26,92	22,23	14,81			12,08
					34					R97	987,43	942,97	965,20			26,92	22,23	14,81			12,75
					36					R98	1044,58	1000,12	1022,35			26,92	22,23	14,81			13,51
							8	8		R99	246,08	223,82	234,95			16,00	11,13	7,75			0,95
						20				R00	777,88	720,72	749,30			35,05	28,58	19,81			16,79
						28				R01	831,85	768,35	800,10			38,10	31,75	22,33			21,83
						30				R02	889,00	825,50	857,25			38,10	31,75	22,33			23,39
						32				R03	946,15	882,65	914,40			38,10	31,75	22,33			24,95
						34				R04	1000,13	930,27	966,20			41,40	38,93	24,82			31,49
						36				R05	1057,28	987,42	1022,35			41,40	34,93	24,82			33,35

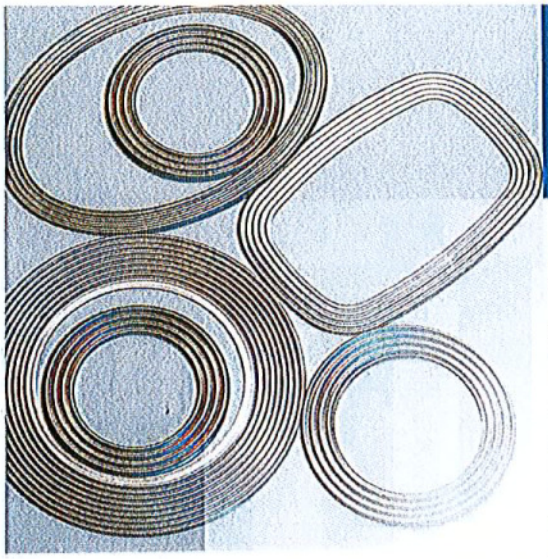

6. CORRUGATED METAL GASKETS

PROPERTIES AND APPLICATION

The corrugated metal gaskets have been proven to be both reliable and cost-effective for the application on flanges and heads where bolt loading is sufficient. Their operation principle is based on different degrees of hardness of adjacent materials. The sealing effect is produced by the constant load to which a gasket is exposed. They are used in applications, which require mechanical strength, thermal conductivity, as well as temperature and corrosion resistance. They can be classified into flat, serrated and corrugated types, and are particularly useful when compressibility is not a factor and where sufficient clamping force is available. Metal gaskets feature greater mechanical strength, better heat transfer and resistance to higher temperatures and pressures, and can offer advantages over the clad type gaskets in certain applications.

The corrugated metal gaskets with soft layer on both sides are used in low-pressure applications in large diameter flue gas ducts at high temperatures. The use of corrugated gaskets eliminates the problem of difficult handling whith large non-metal gaskets used in those applications. They are suitable for gas pipes and valve caps, or wherever acids, oils and chemicals are found. They can be used at lower pressures and higher temperatures.

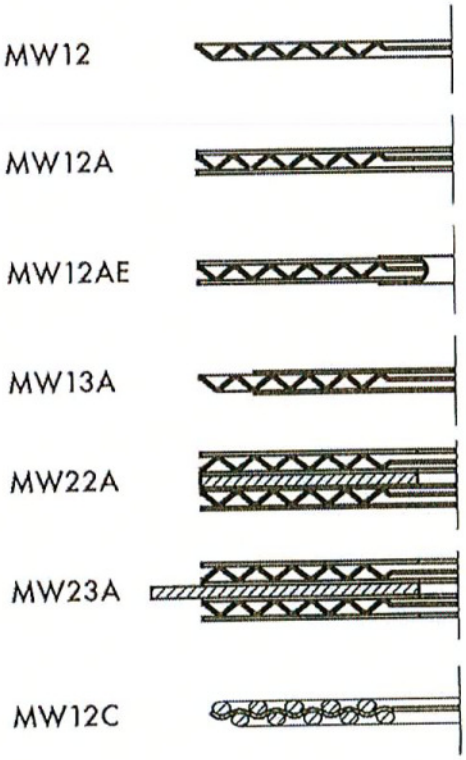

ADVANTAGES

- Outstanding mechanical strength and thermal conductivity
- Capable of withstanding high temperatures
- There are almost no limitations regarding size
- Solid construction provides stability even for large diameters and ensures trouble-free handling and installation

SHAPE AND CONSTRUCTION

The metal gaskets are produced in several types to meet the most demanding applications. Shapes: Round, Oval, Rectangular, etc.

MATERIALS FOR METAL AND CORUGATED METAL GASKETS

Material	ASTM	DIN Material No.
Low Carbon Steel	Soft iron	1.1003
Stainless steel	AISI 304	1.4301
Stainless steel	AISI 316	1.4401
Stainless steel	AISI 321	1.4541
Stainless steel	AISI 316 Ti	1.4571

Metal gaskets

There are different types of metal gaskets, like flat, groove, tongue and sectional ones. They are used where compressibility (elasticity) of sealing material is not required. The construction of such gaskets based on the principle of different hardness of adjacent materials. These gaskets come in various shapes and there are almost no limits concerning their size.

6.CORRUGATED METAL GASKETS

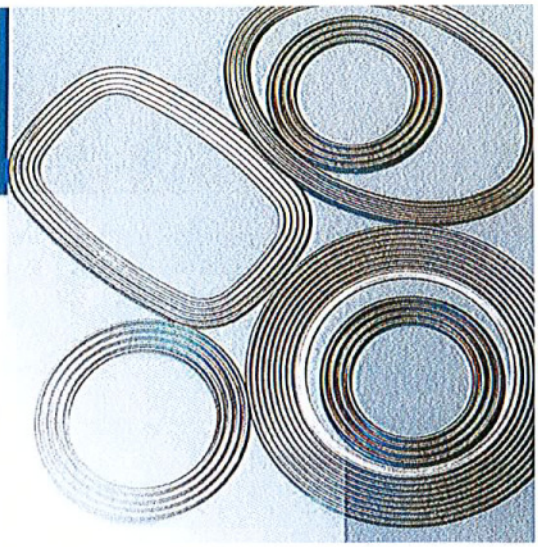

Corugated gaskets

Corrugated metal is covered with graphite, ceramic or PTFE layers. An additional finishing layer is applied depending on the requirements of the medium to be sealed. Such gaskets are used on uneven or distorted sealing surfaces, where more elastic materials with better sealing performance are needed.

SIZE

Metal gaskets

The gasket constructions with an external diameter 1000 mm is usually made in one piece, larger dimensions are welded. Welding is also recommended for cost-effectiveness.

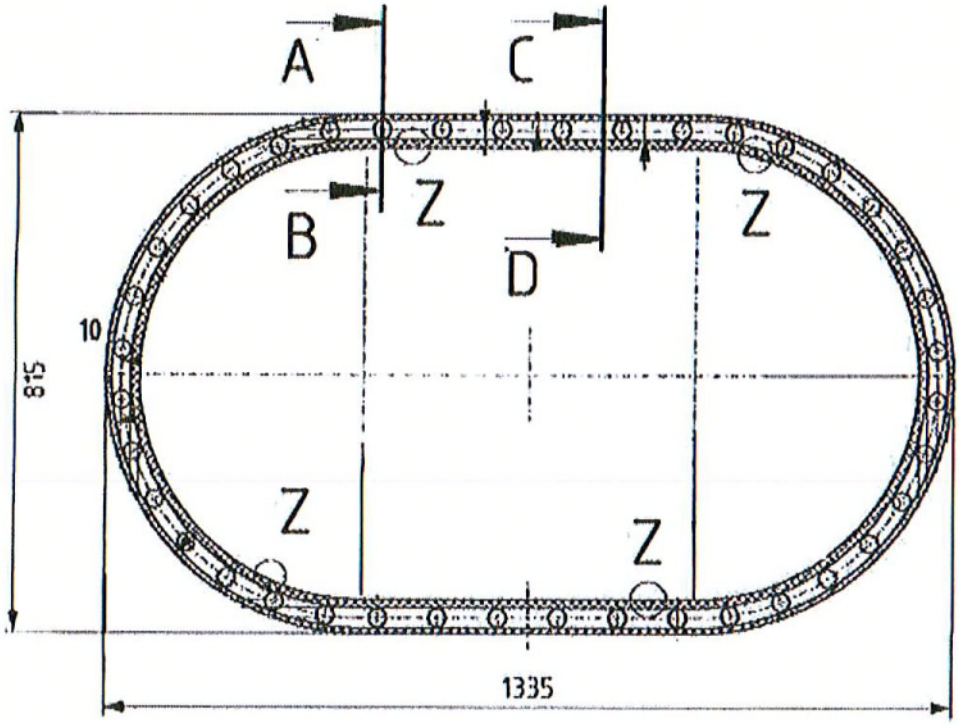

Corugated gaskets

The metal is 0.5 mm thick and the corrugation pitch is 3 mm, 4 mm or 6 mm depending on the width of the gaskets. The thickness of corrugation is approx. 1mm to 1.5 mm, depending on gasket size. Corrugated metal is covered with graphite, grafilit SF, SL, SP, ceramic or PTFE layers in thickness 0.5 mm, 1mm or 1.5 mm.

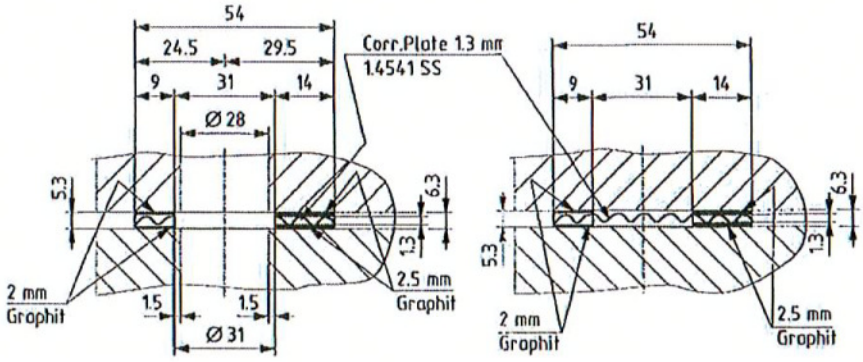

GASKET ORDERING EXAMPLE:

STANDARD SIZE:

CORRUGATED GASKET M12A,
EN1514-4 DN100, PN40,
Material: 1.4571/Graphite

NON-STANDARD DIMENSION:

Corrugated gasket M12A,
OD=946 mm, ID=914 mm, s=3.5 mm,
Material: AISI316TI/Graphite

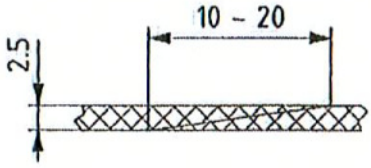

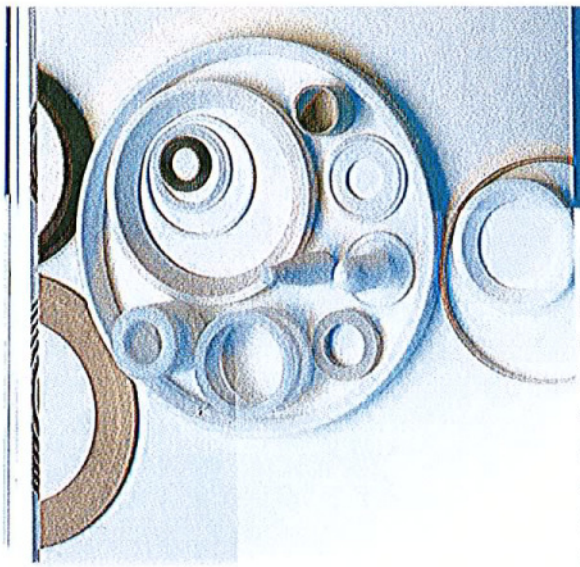

9. PTFE GASKETS

PROPERTIES AND APPLICATION

PTFE gaskets are one of the most suitable types of gaskets for a variety o sealing applications and are mostly based on virgin PTFE or filled PTFE. And what provides the PTFE gaskets with such an extensive range of applicability? The answer is PTFE. PTFE is a fluoropolymer, which features an outstanding chemical resistivity to almost all chemicals, good thermal insulation properties, and useful mechanical and processing characteristics. The above-mentioned PTFE features can be usefully applied in PTFE gaskets. They can be mostly used in valve seats, bearings, requested to resin sliding and chemicals, elastic band for un-lubricated compressors, O-rings where elastomers can not withstand. An extended range of improved mechanical and processing properties can be additionally reached by combination of virgin PTFE and different fillers. Different combination offer a variety of different properties describet in the following table.

T10

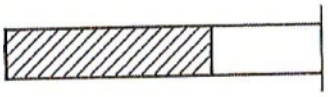

T14

T16

Filler	Improved properties
Glass	→ enhanced wear resistance → chemical resistance
Graphite	→ extremely low coefficient of friction → fairly good compressive strength → good wear resistance
Carbon	→ good thermal resistance → resistance to deformation
Bronze	→ enhanced compressive strength → good wear resistance → high thermal conductivity

Expanded PTFE Gaskets and Seal materials consist of virginal PTFE withmultidirectional fibrous and/or porous structure, which the extruded PTFE consists of. A special manufacturing process provides the material with special chemical and physical properties. This can be of advantage in wide range of the applications.

ADVANTAGES

Virgin PTFE, PTFE compounds and expanded PTFE offer a wide range of compounded products with good mechanical properties, electrical properties, thermal properties, chemical resistance, low friction coeficient and good resistance to wear.

SHAPE AND CONSTRUCTION

Several types of PTFE gaskets are produced to meet the most demanding application.

Materials

We are using virgin PTFE powder and compounds for RAM extrusion and compression moulding delivered exclusively by recognised supplier.

SIZE

SIZE limitations: each peace can feature a maximum external diameter of up to 1000 mm.

STANDARDS FOR PTFE GASKETS USED WITH FLANGES	
Gasket Standard	**Flange Standard**
EN 1514-1 (former DIN 2690, DIN 2692, DIN 2693)	PrEn 1092-1,-2,-3,-4 , EN 545, EN 598, EN 969

GASKET ORDERING EXAMPLE

EN 1514-1 (former DIN 2690), DN 65, PN 16, Form IBC
virgin PTFE, 2 mm,

10. PTFE ENVELOPE GASKETS

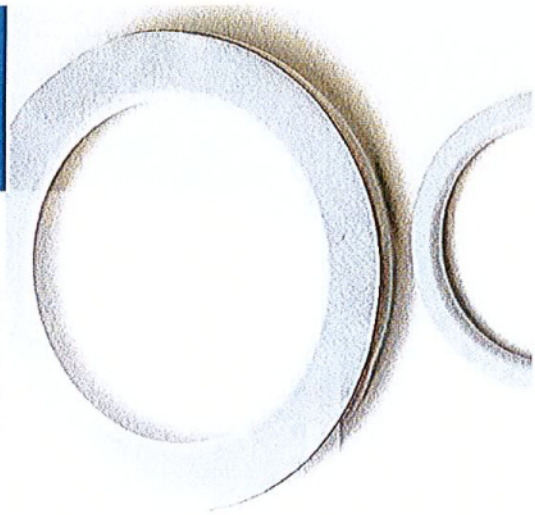

PROPER TIES AND APPLICA TION

The sealing insert is made of corrugated stainless steel, soft non-asbestos material or rubber. This insert is coated with PTFE and open on one side, usually on the outside. Thanks to the high chemical stability, good mechanical properties and permanent resistance in the atmosphere (humidity, gasses, temperature changes) they are suitable for all types of gaskets and different media, mostly for aggressive chemicals.

ADVANTAGES

Thanks to the high stability of C-F bond virgin PTFE, which is used for the envelope, exhibits extraordinary chemical resistance. Combinations of two or more insert materials allow a large number of different applications.

SHAPE AND CONSTRUCTION

The PTFE enveloped gaskets are produced in several types to meet the most demanding applications. Standard shapes are round and oval.

Enveloped materials: Virgin PTFE,
Base material: Stainless steel, non-asbestos material, rubber, ...

SIZE

The PTFE envelope for gaskets with maximum external diameter of up to 500 mm are made in one piece, for gaskets with greater diameters they are welded. Oval shapes of PTFE envelopes are welded. There are no limitations regarding sizes for gaskets with welded envelopes.

EN 1514-3

DN	Gasket inside	Envelope outside	Gasket outside diameter					
mm	diameter min.	diameter min.	PN 6	PN 10	PN 16	PN 25	PN 40	PN 63
10	18	36	39	46	46	46	46	56
15	22	40	44	51	51	51	51	61
20	27	50	54	61	61	61	61	72
25	34	60	64	71	71	71	71	82
32	43	70	76	82	82	82	82	88
40	49	80	86	92	92	92	92	103
50	61	92	96	107	107	107	107	113
65	77	110	116	127	127	127	127	138
80	89	126	132	142	142	142	142	148
100	115	151	152	162	162	168	168	174
125	141	178	182	192	192	194	194	210
150	169	206	207	218	218	224	224	247
200	220	260	262	273	273	284	290	309
250	273	314	317	328	329	340	352	364
300	324	365	373	378	384	400	417	424
350	356	412	423	438	444	457	474	486
400	407	469	473	489	495	514	546	543
450	458	528	528	539	555	564	571	
500	508	578	578	594	617	624	628	
600	610	679	679	695	734	731	747	

GASKET ORDERING EXAMPLE

EN 1514-3, Type C, DN 65, PN 16, 2 mm, virgin PTFE

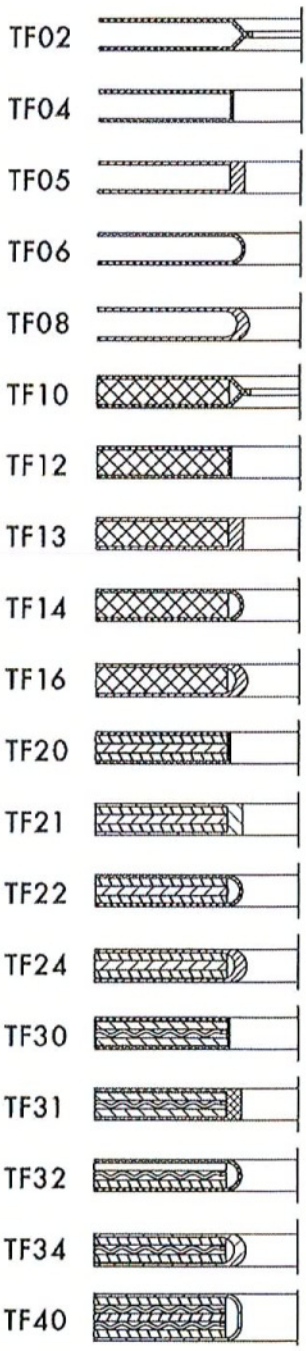

all dimensions are in mm

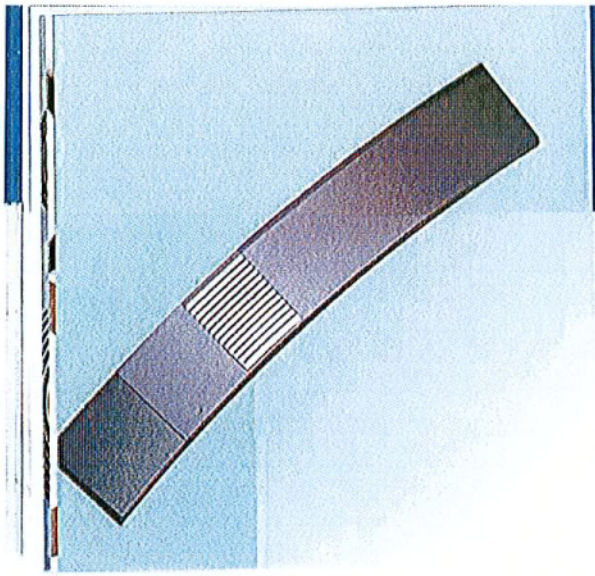

11. SPECIAL GASKETS AND CUSTOM MADE GASKETS

PROPERTIES AND APPLICATION

With our own technology, knowledge and experience is capable to meet various customer needs. In close co-operation with customers the company develops and produces special types of gaskets for various applications. Gaskets are produced up to the size of 4000mm in different special types for the most demanding applications in process industry, for sealing hot gases...

ADVANTAGES:

- custom made gaskets according to customers demand
- special large single piece gaskets up to 4000 mm in sizes
- unique and strong construction allows easy handling and transpor
- high temperature resistance up to 700° (depends on material)
- capability to compensate irregularities on flanges

SHAPE AND CONSTRUCTION-CUSTOM MADE GASKETS

Custom-made gaskets are made to customer's own drawing and specification, samples and templates. A highly skilled hardworking team can provide almost any customers demand.

DIMENSION

up to 4000 mm, according to customers specification

AN EXAMPLE OF GASKET ORDERING

According to customer specification

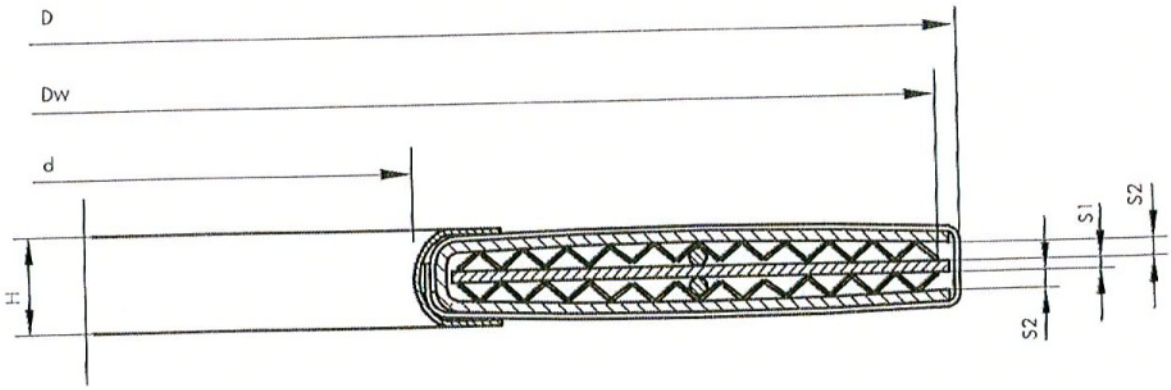

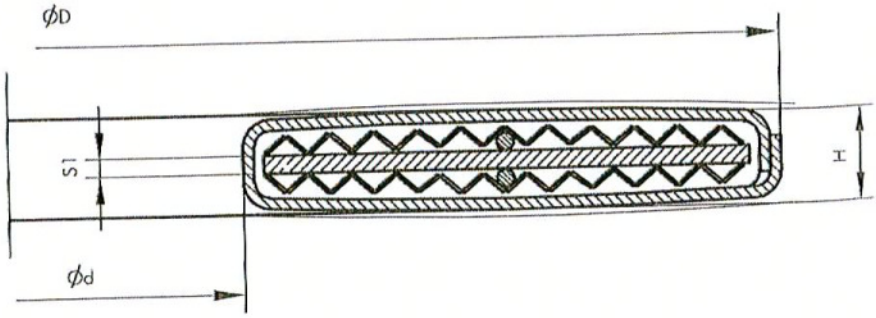

12. Physical properties of Metal gasket materials

AISI / ASTM	Individual name	Material No.	DIN 17 006	Hardness HB	Tensile strenght [N/mm²]	Tensile strenght [N/mm²](d 0,2)	Temperature [°C]		Density [g/mm²]
							min.	max.	
METAL									
A 570 Gr.36	Lov carbon steel	1.0038	RSt 37-2	100-130	370-450	220	-40	+500	7,85
A 619 (100)	Steel sheet	1.0333	Ust 13; St 13; St3	90-120	270-370	250	-40	+500	7,85
Soft-Iron	Soft-Iron	1.1003	M2 / Armco	90-110	270-350	190	-60	+450	7,85
430	Stainless steel	1.4016	X6 Cr 17	130-170	450-600	270	-20	+350	7,70
304 (304H)	Stainless steel	1.4301	X5 CrNi 18 10	130-180	500-700	195	-200	+550	7,90
304L	Stainless steel	1.4306	X2 CrNi 19 11	130-170	460-680	180	-270	+550	7,90
316	Stainless steel	1.4401	X5 CrNiMo 17 12 2	130-180	500-670	205	-200	+550	7,95
316L	Stainless steel	1.4404	X2 CrNiMoTi 17 13 2	120-170	490-690	190	-200	+550	7,95
316L	Stainless steel	1.4435	X2 CrNi 18 14 3	120-170	490-690	190	-200	+550	7,98
321	Stainless steel	1.4541	X6 CrnTi 18 10	130-190	500-730	205	-270	+550	7,90
347	Stainless steel	1.4550	X6 CrNiNb 18 10	130-190	510-740	205	-200	+550	7,90
316Ti	Stainless steel	1.4571	X6 CrNiMoTi 17 12 2	130-190	500-730	215	-270	+550	7,98
309	Stainless steel	1.4828	X15 CrNiSi 20 12	130-220	500-750	230	-110	+800	7,90
B 408, B 409	Incoloy 800	1.4876	X10 NiCrAlTi 32 20	130-220	500-750	210	-110	+850	8,00
NON-METAL									
-	Cooper	2.0090	SF-CU	55-65	200-250	90	-270	+400	8,94
Brass	Messing Ms 63	2.0321	CuZn 37	60-80	290-370	140	-200	+350	8,44
-	Flumbum 99,9	2.3040	Pb 99,9	4	12	-	-250	+200	11,50
-	Nickel 99,6	2.4060	Ni 99,6	100-150	340-400	140	-60	+600	8,90
B 162, alloy 200	Nickel 99,2	2.4066	Ni 99,2	100-150	380-450	160	-60	+600	8,90
B 127, alloy 400	Monel 400	2.4360	NiCu 30 Fe	100-130	450-580	200	-60	+500	8,88
B 168, alloy 600	Inconel 600	2.4816	NiCr 15 Fe	140-200	550-800	200	-60	+600	8,42
-	Aluminium 99,5	3.0255	Al 99,5	20-25	70-80	509	-250	+350	2,70
-	Aluminium alloy	3.3315	AlMg 1	25-35	90-110	60	-250	+300	2,70
B 348 Gr.1	Titan I	3.7025	Ti	110-140	290-410	180	-60	+300	4,50
B 348 Gr.2	Titan II	3.7035	Ti	120-160	390-540	250	-60	+350	4,50

12. Physical properties of Metal gasket materials

	Brass	Lead	Copper	Aluminium	Monel	Low-Carbon Steel	AISI 304, 321	AISI 316, 316 Ti
SIMPLE AND COMBINED AROMATIC HYDROCARBONS								
Aniline, $C_6H_5NH_2$	1	2	3	3	1	1	1	1
Cibit acid, $C_6H_4O_2$, H_2O	3	1	1	1	1	3	1	1
Nitrobenzene, $C_6H_5NO_2$		2	1	2	2	1	2	1
Toluene, $C_6H_5CH_3$		1	2	1	1	1	2	2
OTHER COMPOUNDS AND ORGANIC ELEMETS								
Bromine, Br	2	3	3	2	2	3	3	3
CO_2 or carbon anhydride, dry		1	1	1	1	1	1	1
CO_2 or carbon anhydride, wet		3	1	1	1	1	1	1
CO, hot	3	2	3	2	2	1	1	1
Glue		2	1	1	1	1	1	1
Chlorine, Cl_2, dry	2	1	1	1	1	1	1	1
Chlorine, Cl_2, wet	3	1	3	3	3	3	3	2
Oxygen, O_2, at temp. below 260°C		3	1	1	1	1	1	1
Oxygen, O_2, at temp. between 260°C and 535°C		3	3	2	1	1	1	1
Oxygen, O_2, at temp. over 535°C		3	3	3	3	3	3	3
Creosote	2	2	1	1	1	1	1	1
Oxide, cold		1	1	1	1	1	1	1
Ozone, O_3		2	2	2	2	2	2	2
Steam, O_2, at temp. below 260°C	1	2	1	1	1	1	1	1
Steam, at temp 260°C and 535°C	3	3	2	2	2	1	1	1
Steam, O_2, at temp. over 535°C	3	2	3	3	3	3	1	1
Gas, lean		1	2	1	1	1	2	2
Gas, natural		1	2	1	1	1	1	1
Gas, coke gas		2	1	2	1	1	2	1
Hydrogen (gas), H_2 cold		1	1	1	1	1	1	1
Hydrogen (gas), H_2 hot		3	3	2	1	1	1	1
Air	1	1	1	1	1	1	1	2
Mercury, Hg	3	2	3	3	1	1	1	1
Sulphur, S	3	2	3	1	3	1	1	1
Sulphur chloride, S_2Cl_2	3	1	3	2	2	2	2	2
BASES, ACIDS AND INORGANIC SALTS								
Aluminium fluoride, AlF_3	3	2	2	3	2	2	2	2
Aluminium chloride, $AlCl_3$	3	3	1	3	1	1	3	3
Al-sulphate, $Al_2(SO_4)_3$	3	1	1	1	1	3	1	1
Ammonia vapour, NH_3, cold	3	1	2	1	1	1	1	1
Ammonia vapour, NH_3, hot	3	3	2	1	2	1	1	1
Ammonium monobas. phosph $(NH_4)H_2PO_4$	2	1	1	3	2	3	1	1
Ammonium dibasic phosph $(NH_4)_2HPO_4$	3	1	1	1	1	1	1	1
Ammonium tibasic phosph $(NH_4)_3PO_4$	3	1	1	1	1	1	1	1
Ammonium hydroxide, NH_4OH	3	1	3	1	2	1	1	1
Ammonium chloride, NH_4Cl	3	1	3	3	1	2	1	1
Ammonium nitrate, NH_4NO_3	3	3	3	1	2	1	1	1
Ammonium sulphate, $(NH_4)_2SO_4$	3	1	1	2	1	1	1	1
Barium hydroxide, Ba $(OH)_2$		3	3	3	2	2	1	2
Barium chloride, $BaCl_2$	1	2	2	3	2	2	1	1
Barium sulphide, BaS		1	3	2	1	2	1	1
Borax, $Na2B4O7$ 10H2O	1	2	1	1	1	1	1	1
Boric acid, H_3BO_3	3	1	1	1	1	3	1	1
Bromidic acid, HBr	3	2	2	3	2	3	2	2
Hydrocyanic acid, HCN	3	2	2	2	1	2	1	1
Fluosilicic acid	3	1	2	2	2	3	3	3
Phosphoric acid, H_3PO_4, crude	3	2	3	3	3	2	2	2
Alum, KCr $(SO4)2$ 12H2O	3	1	1	1	1	3	1	1
Calcium bisulphite, Ca $(HSO_3)_2$	3	1	3	2	3	2	1	1
Calcium hydroxide, Ca $(OH)_2$	3	2	2	2	1	1	1	1
Calcium hypochlorite, $CaOCl_2$ $4H_2O$	3	3	2	3	2	2	2	2
Calcium chlorite, $CaCl_2$	3	3	1	2	1	1	2	2
Chromic acid, H_2CrO_4	3	1	3	3	1	2	2	1
Carbon bisulphide, CS_2	3	2	3	1	1	1	1	1
Hydrochloric acid, HCl, below 65°C	3	1	3	3	2	3	3	3
Hydrochloric acid, HCl, over 65°C	3	3	3	3	2	3	3	3
Iron chloride, $FeCl_3$	3	3	3	3	3	3	3	3
Iron sulphate $Fe_2(SO_4)_3$	3	1	3	3	3	3	1	1
FUELS, FLUIDS, LUBRICANTS								
Asphalt		2	1	2	1	1	1	2
Petrol, with sulph. compounds	3	1	2	2	1	2	2	1
Petrol, refined	1	1	1	1	1	1	1	1
Benzoline	1	1	1	1	1	1	1	1
Cellulose paints and solvents		2	2	1	1	2	1	1
Ether, $C_2H_5OC_2H_5$	1	1	1	1	1	1	2	2
Vinegar, CH_3COOH, 5%	3	2	2	2	1	2	1	1
Milk	2	2	2	1	1	1	2	1
Naphta	1	1	1	1	1	1	1	1
Fuel oil	1	1	1	2	1	1	1	2
Linseed oil		1	1	1	1	1	1	1
Lubricant oil, unrefined		1	2	2	1	2	2	2
Lubricant oil, refined		1	1	1	1	1	1	2
Mineral oil	1	1	1	1	1	1	1	1
Castor oil		2	2	1	1	1	1	2
Crude oil, at temp. below 260°C	1	2	2	1	2	1	1	1
Crude oil, at temp. between 260°C and 535°C	1	3	3	1	3	3	1	1
Crude oil, at temp. over 535°C	1	3	3	3	3	3	2	2
Tar		2	2	1	2	1	1	2
Turpentine	1	1	2	1	1	2	1	1
Water, H_2O distilled	3	3	3	1	2	3	1	1
Sea water, H_2O	3	1	2	3	1	2	1	1
Mineral water, H_2O with oxidizing salts	2	2	2	2	3	3	1	1
Mineral water, H_2O without oxidizing salts	1	2	2	1	1	2	2	3
Drinking water, H_2O	1	1	1	1	1	2	1	1

	Brass	Lead	Copper	Aluminium	Monel	Low-Carbon Steel	AISI 304, 321	AISI 316, 316 Ti
ALCOHOLS, ETHERS, ACIDS, ESTERS, ANHYDRIDES AND KETONES								
Acetone, CH_3COOH_3.		1	1	1	1	1	1	1
Amyl acetate, CH3COOC5H10.	2	2	1	1	1	2	1	1
Amyl alcohol, C5H11OH		2	1	2	1	1	2	2
Acetic anhydride, $(CH_3CO)_2O$	3	3	3	1	1	2	1	1
Cupric chloride, $CuCl_2$	3	1	2	3	1	3	1	1
Cupric sulphate, $CuSO_4$	3	1	2	3	1	1	3	3
Butyl alcohol, C_4H_9OH		2	1	2	1	1	2	2
Butyl acetate, $CH_3COOC_4H_9$.	1	2	1	1	1	2	1	1
Zinc chloride, $ZnCl_2$	3	1	3	3	1	2	3	3
Zinc sulphate, $ZnSO_4$		2	3	2	1	2	1	1
Nitric acid, HNO_3, crude	3	3	3	2	3	3	2	2
Nitric acid, HNO_3, diluted	3	3	3	3	3	3	1	1
Nitric acid, HNO_3, concentrated	3	3	3	1	3	3	1	1
Ethyl acetate, $CH_3COOC_2H_5$.		2	1	1	1	1	1	1
Ethyl cellulose		2	2	2	1	2	2	2
Ethylene chloride, $(CH_2Cl)_2$.	1	2	1	2	1	1	1	1
Ethylenglycol, $(CH_2OH)_2$.	1	1	1	1	1	1	1	1
Phenol, C_6H_5OH	2	1	3	1	1	2	1	1
Formaldehyde, HCHO	1	3	1	1	1	1	1	1
Phosphoric acid, H_3PO_4								
- with concentr. below 45%	3	1	1	2	1	3	1	1
- cold, concentr. over 45%	3	1	1	3	1	3	1	1
- hot, concentr. over 45%	3	3	2	3	2	3	3	2
Hydrofluoric acid, HF								
- cold, concentr below 65%	3	1	2	3	1	3	3	3
- cold, concentr over 65%	3	2	1	3	1	1	3	3
- hot, concentr below 65%	3	3	3	3	2	3	3	3
- hot, concentr over 65%	3	3	1	3	1	2	3	3
Glycerine, (CH_2OH_2) CHOH	1	1	1	1	1	1	1	1
Glucose		2	1	1	1	1	1	1
Potash, K	3	3	3	3	1	2	1	1
Potassium cyanide, KCN	3	3	3	3	1	1	1	1
Potassium chloride, KCl	3	1	1	2	1	1	1	1
Potassium sulphate, K_2SO_4	1	1	1	1	1	1	1	1
Stannic chloride, $SnCl_2$	3	2	3	3	3	2	2	2
Chloroacetic acid, $CH_2ClCOOH$		3	3	3	2	3	3	3
Cresylic acid	1	2	1	1	1	1	2	1
Magnesium hydroxide, $Mg(OH)_2$	1	2	3	3	1	1	1	1
Magnesium chloride, $MgCl_2$	3	3	1	3	1	1	1	1
Magnesium sulphate, $MgSO_4$	1	2	1	2	1	1	1	1
Methyl alcohol methanol, CH_3OH	1	1	1	1	1	1	1	1
Sodium cyanide, NaCN	3	3	3	3	1	1	2	1
Sodium phosphate, Na_3PO_4								
12H2O, monobasic		2	2	1	1	2	2	1
Sodium phosphate, Na_2HPO_4, dibasic		2	1	1	1	2	2	1
Sodium phosphate, NaH_2PO_4, tribasic		1	3	3	1	1	2	1
Sodium hydroxide, NaOH	3	1	3	3	1	1	1	1
Sodium hypochlorite, NaOCl	3	3	2	3	2	3	3	3
Sodium carbonate, Na_2CO_3	1	1	2	3	1	1	1	1
Sodium chloride, NaCl	3	1	1	3	1	1	1	1
Sodium metaphosphate, $NaPO_3$		1	2	1	1	2	1	2
Sodium nitrate, $NaNO_3$	1	1	1	1	1	1	1	1
Sodium perborate, $NaBO_3$ $4H_2O$		2	2	1	1	2	1	1
Sodium peroxide, Na_2O_2		2	2	1	1	2	1	1
Sodium silicate, $Na_2SiO_3K_2SiO_3$	2	3	2	3	1	1	2	1
Sodium sulphate, Na_2SO_4	1	1	1	2	1	1	1	1
Sodium sulphite, Na_2SO_3	3	1	3	3	1	1	1	1
Sodium thiosulphate, $Na_2S_2O_3$	3	1	3	3	2	2	1	1
Nickel sulphate, $NiSO_4$	3	2	3	3	2	2	1	1
SIMPLE AND COMBINED ALIPHATIC HYDROCARBONS								
Acetylene, C_2H_2	3	1	2	1	1	1	1	1
Butane, C4H10		2	2	1	1	1	2	1
Freon, $CHClF_2$	1	1	1	1	1	2	2	2
Methyl chloride, CH_3Cl_2	1	1	1	2	1	1	2	2
Lactic acid, $CH_3CHOHCOOH$, cold	3	2	2	2	1	3	2	1
Lactic acid, $CH_3CHOHCOOH$, hot	3	2	2	3	2	3	2	2
Formic acid, HCOOH	3	3	1	3	2	3	1	1
Acetic acid, CH_3COOH, unrefined	3	3	1	1	1	3	2	1
Acetic acid, CH_3COOH, pure	3	1	1	1	1	3	1	1
Acetic acid, CH_3COOH, vapour	3	3	1	2	1	3	1	1
Acetic acid, CH_3COOH, at 10 bar and 2000C	3	3	1	2	1	3	2	1
Oxalic acid, $(COOH)_2$	3	3	2	1	1	2	2	2
Oleic acid, C17H33COOH	3	3	3	1	1	2	1	1
Palmitic acid, C15H31COOH	1	1	1	1	1	1	1	1
Molten picric acid, $(NO_2)_3C_6H_2OH$	3	3	3	1	3	1	1	1
Aqueous solution of picric acid $(NO_2)_3C_6H_2OH$	3	3	3	3	2	2	1	1
Propane, C_3H_8		1	2	2	1	1	1	1
Stearic acid, C17H35COOH	2	1	2	2	1	2	1	1
Carbon tetrachloride, CCl_4	3	1	2	2	1	2	2	2
Solvents based on chlorine, dry		1	1	1	1	1	1	2
Solvents based on chlorine, wet		1	3	3	1	3	2	2
Trichloroethylene, C_2HCl_3	1	1	2	2	1	2	2	2
Nickel chloride, $NiCl_2$	3	2	3	3	2	2	1	1
Sodium bicarbonate, Na_2CO_3	1	1	2	3	1	1	1	1
Hydrogen peroxide, H_2O_2		1	3	1	1	3	1	1
Mercury chloride, $HgCl_2$	3	2	3	3	3	2	3	3
Sulphurous acid, H_2SO_3	3	1	2	2	3	1	3	2
Sulphuric acid, H_2SO_4								
- cold, with concentr up to 10%	3	1	2	2	2	3	1	1
- hot, with concentr up to 10%	3	1	3	2	2	3	3	1
- cold, concentr. 10-75%	3	1	3	2	2	3	3	1
- hot, concentr. 10-75%	3	1	3	3	2	3	3	1
- cold, concentr. 75-95%	3	1	3	2	2	2	1	1
- hot, concentr. 75-95%	3	1	3	3	2	1	3	3
- steaming concentr. 75-95%	3	1	3	2	3	2	2	1
Hydrogen sulphide, H_2S dry, cold		2	3	1	1	1	1	1
Hydrogen sulphide, H_2S dry, hot		2	3	1	3	3	2	2
Hydrogen sulphide, H_2S wet, cold		2	3	1	1	2	1	1
Hydrogen sulphide, H_2S wet, hot		2	3	1	3	3	2	2

1 -recommended

2 -recommendotion depends on operating conditions

3 -not recommended

14. How to select an Industrial gasket?

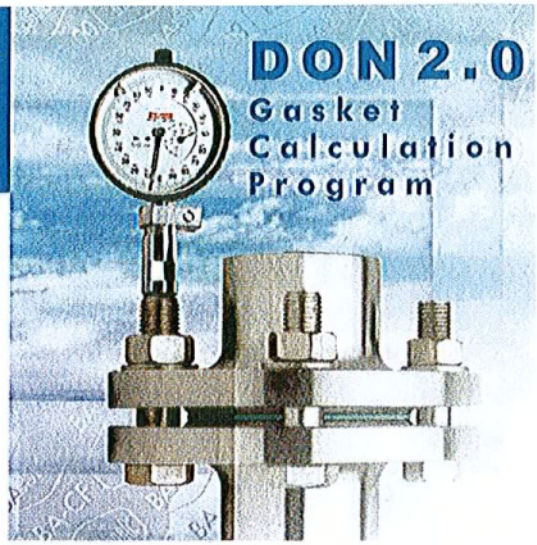

For any gasket application the choice of gasket material will depend on the operating conditions, mechanical features of the flanged assembly and the gasket characteristics and dimensions. In general, operating conditions determine the choice of jointing material, whereas the dimensional and mechanical features of the flange define the gasket type. The performance of any jointing material is influenced by the temperature, internal pressure, fluid, bolts (compressive stress), flange (type of flange, flange surface finish...), cost-effectiveness and other special considerations. By using special software like the Gasket Calculation software DON, we combined all gasket selection factors thus offering our customers an easy and safe gasket selection.

GASKET CALCULATION SOFTWARE-EASY AND SAFE GASKET SELECTION!

The software DON represents a successful tool for the proper choice of gasket materials & gaskets, and for solving a majority of sealing problems connected to the static sealing area. It is a windows-based software. The main advantage of this software is to make the work of gasket material users, gasket and flange designers and all other persons connected with static sealing problems easier to any calculations as simple as possible. The basic idea was to make all activities connected

15. Gasket installation procedures

How to install and use gaskets in the field?

Successfully sealing a flanged connection depends upon many elements of a well - designed flanged system working well together. Here is a summary, which should serve as a guideline for maintenance operators, engineers, and fitters in order to ensure successful gasket installation and assembly of bolted flange connections.

Tools Required

Special tools are required for cleaning and tensioning the fasteners. In addition, always use standard safety equipment and follow good safety practice. Prepare the following equipment prior to installation:

- Calibrated tor que wrench, hydraulic or other tensioner
- Wire brush
- Lubricant
- Helmet and safety goggles
- Other plant specified equipment

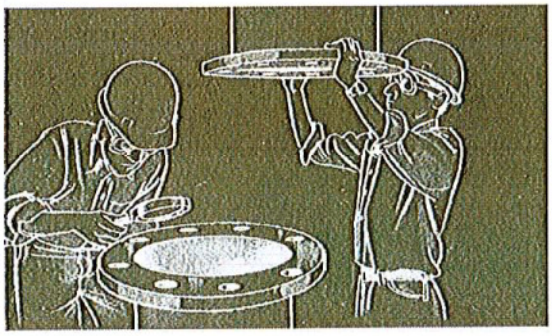

1. Clean and examine

Remove all particles and debris from seating surfaces, fasteners (bolds or studs), nuts, and washers. Use plant-specific dust control procedures. Examine fasteners (bolds or studs), nuts, and washers for defects such as burrs or cracks. Examine flange surfaces for warping, radial scores, heavy tool marks, or anything prohibiting proper gasket seating. Replace components if found to be defective.

2. Align flanges

Align flange faces and bolt holes without using excessive force. Report any misalignment.

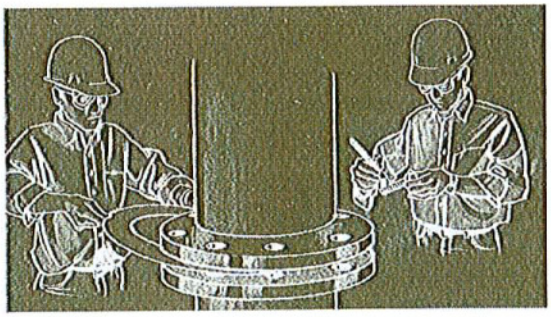

3. Install gasket

Verify if the gasket is of the specified size and material. Carefully insert gaskets between the flanges. Make sure the gasket is centred between the flanges. Do not use "jointing compounds", graphite, grease or release agents on the gasket or seating surfaces. Bring flanges together, ensuring the gasket isn't pinched or damaged.

4. Lubricate load-bearing surfaces

Use only specified or approved lubricants. Liberally apply Lubricant uniformly to all thread, nut, and washer load-bearing surfaces. Ensure Lubricant doesn't contaminate either flange or gasket face.

15. Gasket instalation procedures

5. Install and tighten bolts

Always use proper tools: calibrated torque wrench or other controlled tensioning device.

Consult our Technical expert or use the Gasket calculation software DON for guidance on torque specification.

Always 'torque nuts in a cross bolt-tightening pattern. Tighten the nuts in multiple steps:

step-1 Tighten all nuts initially by hand. (Larger bolts may require a small hand wrench.)

step-2 Torque each nut to approximately 40% of full torque.

step-3 Torque the nuts to approximately 70% of full torque.

step-4 Torque each nut to full torque, again using the cross bolt tightening pattern. (Large-diameter flanges may require additional tightening passes.)

step-5 Apply at least one final full torque to all nuts in a clock-wise direction until all torque is uniform. (Large diameter flanges may require additional tightening passes.)

6. Retightening

Do not retorque elastomer-based, asbestos free gaskets after they have been exposed to elevated temperatures unless otherwise specified. Retorque fasteners exposed to aggressive thermal cycling. All retorquing should be performed at ambient temperature and atmospheric pressure.

STORING GASKETS

Industrial gaskets consist of various materials, which are subjected to ageing, weathering, oxidation... Ageing causes decreasing of the mechanical properties of gaskets. For this reason storage under the following conditions is recommended:

- Ambient temperature of storage- away from heaters
- Dark storage room- away from direct sunlight
- Dry atmosphere
- Avoid areas where electric discharge appears- ozone production
- The gaskets must lie horizontally-avoid hanging on hooks or folding which could cause cracking

Avoid storing gaskets for more than two years.

CUSTOMERS SERVICE - TECHNICAL SUPPORT

Our team is always available to our customers for any assistance, including advice they might need on the selection and use of our sealing products. This is provided by a special team of highly skilled experts making up the Technical Service department. By spreading the most comprehensive knowledge of our products, the Technical Service can help you to solve practically any sealing problem. If you need our help, do not hesitate to contact us.